OM-238 118D 2010–04

Processes

MIG (GMAW) Welding

Flux Cored (FCAW) Welding

Description

Arc Welding Power Source
and Wire Feeder

Millermatic® 212 Auto-Set™

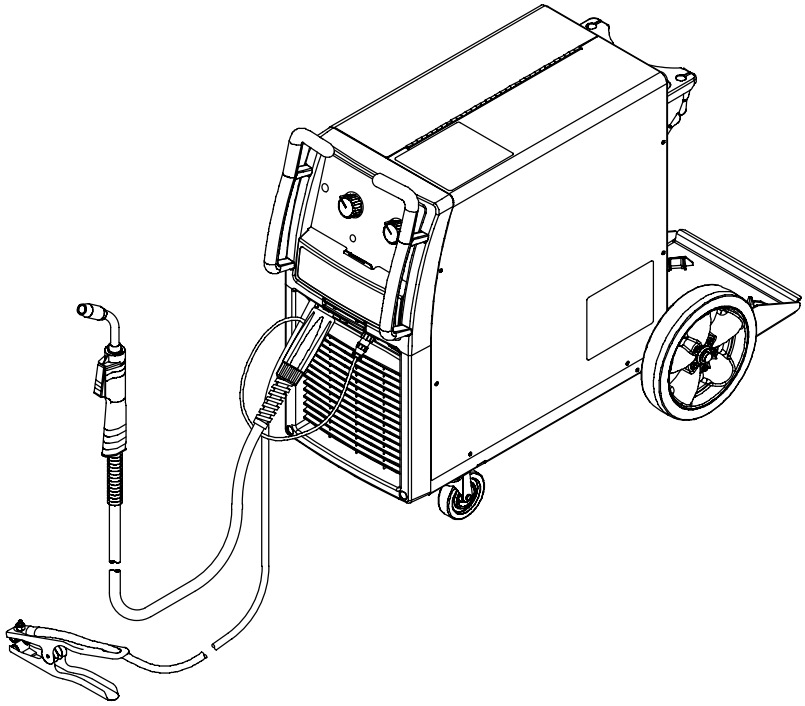

OWNER'S MANUAL

File: MIG (GMAW)

Visit our website at
www.MillerWelds.com

From Miller to You

Thank you and *congratulations* on choosing Miller. Now you can get the job done and get it done right. We know you don't have time to do it any other way.

That's why when Niels Miller first started building arc welders in 1929, he made sure his products offered long-lasting value and superior quality. Like you, his customers couldn't afford anything less. Miller products had to be more than the best they could be. They had to be the best you could buy.

Today, the people that build and sell Miller products continue the tradition. They're just as committed to providing equipment and service that meets the high standards of quality and value established in 1929.

This Owner's Manual is designed to help you get the most out of your Miller products. Please take time to read the Safety precautions. They will help you protect yourself against potential hazards on the worksite. We've made installation and operation quick and easy. With Miller you can count on years of reliable service with proper maintenance. And if for some reason the unit needs repair, there's a Troubleshooting section that will help you figure out what the problem is. The parts list will then help you to decide the exact part you may need to fix the problem. Warranty and service information for your particular model are also provided.

ISO 9001 REGISTERED QUALITY SYSTEM

Miller is the first welding equipment manufacturer in the U.S.A. to be registered to the ISO 9001 Quality System Standard.

TRUE BLUE® WARRANTY

Working as hard as you do – every power source from Miller is backed by the most hassle-free warranty in the business.

Miller Electric manufactures a full line of welders and welding related equipment. For information on other quality Miller products, contact your local Miller distributor to receive the latest full line catalog or individual specification sheets. **To locate your nearest distributor or service agency call 1-800-4-A-Miller, or visit us at www.MillerWelds.com on the web.**

Miller®

TABLE OF CONTENTS

SECTION 1 – SAFETY PRECAUTIONS - READ BEFORE USING **1**
1-1. Symbol Usage 1
1-2. Arc Welding Hazards 1
1-3. Additional Symbols For Installation, Operation, And Maintenance 3
1-4. California Proposition 65 Warnings 4
1-5. Principal Safety Standards 4
1-6. EMF Information 4
SECTION 2 – CONSIGNES DE SÉCURITÉ – LIRE AVANT UTILISATION **5**
2-1. Symboles utilisés 5
2-2. Dangers relatifs au soudage à l'arc 5
2-3. Dangers supplémentaires en relation avec l'installation, le fonctionnement et la maintenance 7
2-4. Proposition californienne 65 Avertissements 8
2-5. Principales normes de sécurité 9
2-6. Informations relatives aux CEM 9
SECTION 3 – DEFINITIONS **11**
3-1. Symbols And Definitions 11
SECTION 4 – INSTALLATION **11**
4-1. Welding Power Source And MIG Gun Specifications 11
4-2. Welding Power Source Duty Cycle And Overheating 12
4-3. Volt-Ampere Curves 12
4-4. Connecting To Weld Output Terminals 13
4-5. Installing Work Cable And Clamp 13
4-6. Installing Welding Gun 14
4-7. Setting Gun Polarity For Wire Type 14
4-8. Connecting Spool Gun 15
4-9. Installing Gas Supply 17
4-10. Installing MIG Wire Spool and Adjusting Hub Tension 18
4-11. Positioning Jumper Links 19
4-12. Electrical Service Guide 19
4-13. Selecting A Location And Connecting Input Power 20
4-14. Threading Welding Wire 21
SECTION 5 – OPERATION **22**
5-1. Controls 22
5-2. Weld Parameter Chart 24
SECTION 6 – MAINTENANCE &TROUBLESHOOTING **26**
6-1. Routine Maintenance 26
6-2. Unit Overload Protection And Tip Saver/Short Circuit Protection 26
6-3. Changing Drive Roll and Wire Inlet Guide 26
6-4. Aligning Drive Rolls and Wire Guide 27
6-5. Troubleshooting 27
SECTION 7 – ELECTRICAL DIAGRAM **30**

TABLE OF CONTENTS

SECTION 8 – MIG WELDING (GMAW) GUIDELINES **32**
8-1. Typical MIG Process Connections 32
8-2. Typical MIG Process Control Settings 33
8-3. Holding And Positioning Welding Gun 34
8-4. Conditions That Affect Weld Bead Shape 35
8-5. Gun Movement During Welding 36
8-6. Poor Weld Bead Characteristics 36
8-7. Good Weld Bead Characteristics 36
8-8. Troubleshooting – Excessive Spatter 37
8-9. Troubleshooting – Porosity 37
8-10. Troubleshooting – Excessive Penetration 37
8-11. Troubleshooting – Lack Of Penetration 38
8-12. Troubleshooting – Incomplete Fusion 38
8-13. Troubleshooting – Burn-Through 38
8-14. Troubleshooting – Waviness Of Bead 39
8-15. Troubleshooting – Distortion 39
8-16. Common MIG Shielding Gases 40
8-17. Troubleshooting Guide For Semiautomatic Welding Equipment 40
SECTION 9 – PARTS LIST **42**
WARRANTY

SECTION 1 – SAFETY PRECAUTIONS - READ BEFORE USING

Protect yourself and others from injury — read and follow these precautions.

1-1. Symbol Usage

DANGER! – Indicates a hazardous situation which, if not avoided, will result in death or serious injury. The possible hazards are shown in the adjoining symbols or explained in the text.

Indicates a hazardous situation which, if not avoided, could result in death or serious injury. The possible hazards are shown in the adjoining symbols or explained in the text.

NOTICE *– Indicates statements not related to personal injury.*

☞ *Indicates special instructions.*

This group of symbols means Warning! Watch Out! ELECTRIC SHOCK, MOVING PARTS, and HOT PARTS hazards. Consult symbols and related instructions below for necessary actions to avoid the hazards.

1-2. Arc Welding Hazards

The symbols shown below are used throughout this manual to call attention to and identify possible hazards. When you see the symbol, watch out, and follow the related instructions to avoid the hazard. The safety information given below is only a summary of the more complete safety information found in the Safety Standards listed in Section 1-5. Read and follow all Safety Standards.

Only qualified persons should install, operate, maintain, and repair this unit.

During operation, keep everybody, especially children, away.

ELECTRIC SHOCK can kill.

Touching live electrical parts can cause fatal shocks or severe burns. The electrode and work circuit is electrically live whenever the output is on. The input power circuit and machine internal circuits are also live when power is on. In semiautomatic or automatic wire welding, the wire, wire reel, drive roll housing, and all metal parts touching the welding wire are electrically live. Incorrectly installed or improperly grounded equipment is a hazard.

- Do not touch live electrical parts.
- Wear dry, hole-free insulating gloves and body protection.
- Insulate yourself from work and ground using dry insulating mats or covers big enough to prevent any physical contact with the work or ground.
- Do not use AC output in damp areas, if movement is confined, or if there is a danger of falling.
- Use AC output ONLY if required for the welding process.
- If AC output is required, use remote output control if present on unit.
- Additional safety precautions are required when any of the following electrically hazardous conditions are present: in damp locations or while wearing wet clothing; on metal structures such as floors, gratings, or scaffolds; when in cramped positions such as sitting, kneeling, or lying; or when there is a high risk of unavoidable or accidental contact with the workpiece or ground. For these conditions, use the following equipment in order presented: 1) a semiautomatic DC constant voltage (wire) welder, 2) a DC manual (stick) welder, or 3) an AC welder with reduced open-circuit voltage. In most situations, use of a DC, constant voltage wire welder is recommended. And, do not work alone!
- Disconnect input power or stop engine before installing or servicing this equipment. Lockout/tagout input power according to OSHA 29 CFR 1910.147 (see Safety Standards).
- Properly install and ground this equipment according to its Owner's Manual and national, state, and local codes.
- Always verify the supply ground – check and be sure that input power cord ground wire is properly connected to ground terminal in disconnect box or that cord plug is connected to a properly grounded receptacle outlet.
- When making input connections, attach proper grounding conductor first – double-check connections.
- Keep cords dry, free of oil and grease, and protected from hot metal and sparks.
- Frequently inspect input power cord for damage or bare wiring – replace cord immediately if damaged – bare wiring can kill.
- Turn off all equipment when not in use.
- Do not use worn, damaged, undersized, or poorly spliced cables.
- Do not drape cables over your body.
- If earth grounding of the workpiece is required, ground it directly with a separate cable.
- Do not touch electrode if you are in contact with the work, ground, or another electrode from a different machine.
- Do not touch electrode holders connected to two welding machines at the same time since double open-circuit voltage will be present.
- Use only well-maintained equipment. Repair or replace damaged parts at once. Maintain unit according to manual.
- Wear a safety harness if working above floor level.
- Keep all panels and covers securely in place.
- Clamp work cable with good metal-to-metal contact to workpiece or worktable as near the weld as practical.
- Insulate work clamp when not connected to workpiece to prevent contact with any metal object.
- Do not connect more than one electrode or work cable to any single weld output terminal.

SIGNIFICANT DC VOLTAGE exists in inverter welding power sources AFTER removal of inputpower.

- Turn Off inverter, disconnect input power, and discharge input capacitors according to instructions in Maintenance Section before touching any parts.

HOT PARTS can burn.

- Do not touch hot parts bare handed.
- Allow cooling period before working on equipment.
- To handle hot parts, use proper tools and/or wear heavy, insulated welding gloves and clothing to prevent burns.

FUMES AND GASES can be hazardous.

Welding produces fumes and gases. Breathing these fumes and gases can be hazardous to your health.

- Keep your head out of the fumes. Do not breathe the fumes.
- If inside, ventilate the area and/or use local forced ventilation at the arc to remove welding fumes and gases.
- If ventilation is poor, wear an approved air-supplied respirator.
- Read and understand the Material Safety Data Sheets (MSDSs) and the manufacturer's instructions for metals, consumables, coatings, cleaners, and degreasers.
- Work in a confined space only if it is well ventilated, or while wearing an air-supplied respirator. Always have a trained watch-person nearby. Welding fumes and gases can displace air and lower the oxygen level causing injury or death. Be sure the breathing air is safe.
- Do not weld in locations near degreasing, cleaning, or spraying operations. The heat and rays of the arc can react with vapors to form highly toxic and irritating gases.
- Do not weld on coated metals, such as galvanized, lead, or cadmium plated steel, unless the coating is removed from the weld area, the area is well ventilated, and while wearing an air-supplied respirator. The coatings and any metals containing these elements can give off toxic fumes if welded.

ARC RAYS can burn eyes and skin.

Arc rays from the welding process produce intense visible and invisible (ultraviolet and infrared) rays that can burn eyes and skin. Sparks fly off from the weld.

- Wear an approved welding helmet fitted with a proper shade of filter lenses to protect your face and eyes from arc rays and sparks when welding or watching (see ANSI Z49.1 and Z87.1 listed in Safety Standards).
- Wear approved safety glasses with side shields under your helmet.
- Use protective screens or barriers to protect others from flash, glare and sparks; warn others not to watch the arc.
- Wear protective clothing made from durable, flame-resistant material (leather, heavy cotton, or wool) and foot protection.

WELDING can cause fire or explosion.

Welding on closed containers, such as tanks, drums, or pipes, can cause them to blow up. Sparks can fly off from the welding arc. The flying sparks, hot workpiece, and hot equipment can cause fires and burns. Accidental contact of electrode to metal objects can cause sparks, explosion, overheating, or fire. Check and be sure the area is safe before doing any welding.

- Remove all flammables within 35 ft (10.7 m) of the welding arc. If this is not possible, tightly cover them with approved covers.
- Do not weld where flying sparks can strike flammable material.
- Protect yourself and others from flying sparks and hot metal.
- Be alert that welding sparks and hot materials from welding can easily go through small cracks and openings to adjacent areas.
- Watch for fire, and keep a fire extinguisher nearby.
- Be aware that welding on a ceiling, floor, bulkhead, or partition can cause fire on the hidden side.
- Do not weld on closed containers such as tanks, drums, or pipes, unless they are properly prepared according to AWS F4.1 (see Safety Standards).
- Do not weld where the atmosphere may contain flammable dust, gas, or liquid vapors (such as gasoline).
- Connect work cable to the work as close to the welding area as practical to prevent welding current from traveling long, possibly unknown paths and causing electric shock, sparks, and fire hazards.
- Do not use welder to thaw frozen pipes.
- Remove stick electrode from holder or cut off welding wire at contact tip when not in use.
- Wear oil-free protective garments such as leather gloves, heavy shirt, cuffless trousers, high shoes, and a cap.
- Remove any combustibles, such as a butane lighter or matches, from your person before doing any welding.
- After completion of work, inspect area to ensure it is free of sparks, glowing embers, and flames.
- Use only correct fuses or circuit breakers. Do not oversize or by-pass them.
- Follow requirements in OSHA 1910.252 (a) (2) (iv) and NFPA 51B for hot work and have a fire watcher and extinguisher nearby.

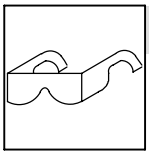

FLYING METAL or DIRT can injure eyes.

- Welding, chipping, wire brushing, and grinding cause sparks and flying metal. As welds cool, they can throw off slag.
- Wear approved safety glasses with side shields even under your welding helmet.

BUILDUP OF GAS can injure or kill.

- Shut off shielding gas supply when not in use.
- Always ventilate confined spaces or use approved air-supplied respirator.

ELECTRIC AND MAGNETIC FIELDS (EMF) can affect ImplantedMedical Devices.

- Wearers of Pacemakers and other Implanted Medical Devices should keep away.
- Implanted Medical Device wearers should consult their doctor and the device manufacturer before going near arc welding, spot welding, gouging, plasma arc cutting, or induction heating operations.

NOISE can damage hearing.

Noise from some processes or equipment can damage hearing.

- Wear approved ear protection if noise level is high.

CYLINDERS can explode if damaged.

Shielding gas cylinders contain gas under high pressure. If damaged, a cylinder can explode. Since gas cylinders are normally part of the welding process, be sure to treat them carefully.

- Protect compressed gas cylinders from excessive heat, mechanical shocks, physical damage, slag, open flames, sparks, and arcs.
- Install cylinders in an upright position by securing to a stationary support or cylinder rack to prevent falling or tipping.
- Keep cylinders away from any welding or other electrical circuits.
- Never drape a welding torch over a gas cylinder.
- Never allow a welding electrode to touch any cylinder.
- Never weld on a pressurized cylinder – explosion will result.
- Use only correct shielding gas cylinders, regulators, hoses, and fittings designed for the specific application; maintain them and associated parts in good condition.
- Turn face away from valve outlet when opening cylinder valve.
- Keep protective cap in place over valve except when cylinder is in use or connected for use.
- Use the right equipment, correct procedures, and sufficient number of persons to lift and move cylinders.
- Read and follow instructions on compressed gas cylinders, associated equipment, and Compressed Gas Association (CGA) publication P-1 listed in Safety Standards.

1-3. Additional Symbols For Installation, Operation, And Maintenance

FIRE OR EXPLOSION hazard.

- Do not install or place unit on, over, or near combustible surfaces.
- Do not install unit near flammables.
- Do not overload building wiring – be sure power supply system is properly sized, rated, and protected to handle this unit.

FALLING EQUIPMENT can injure.

- Use lifting eye to lift unit only, NOT running gear, gas cylinders, or any other accessories.
- Use equipment of adequate capacity to lift and support unit.
- If using lift forks to move unit, be sure forks are long enough to extend beyond opposite side of unit.
- Keep equipment (cables and cords) away from moving vehicles when working from an aerial location.
- Follow the guidelines in the Applications Manual for the Revised NIOSH Lifting Equation (Publication No. 94–110) when manually lifting heavy parts or equipment.

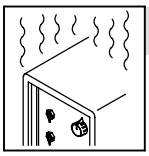

OVERUSE can cause OVERHEATING

- Allow cooling period; follow rated duty cycle.
- Reduce current or reduce duty cycle before starting to weld again.
- Do not block or filter airflow to unit.

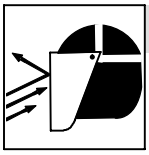

FLYING SPARKS can injure.

- Wear a face shield to protect eyes and face.
- Shape tungsten electrode only on grinder with proper guards in a safe location wearing proper face, hand, and body protection.
- Sparks can cause fires — keep flammables away.

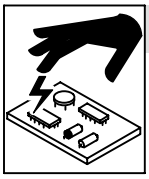

STATIC (ESD) can damage PC boards.

- Put on grounded wrist strap BEFORE handling boards or parts.
- Use proper static-proof bags and boxes to store, move, or ship PC boards.

MOVING PARTS can injure.

- Keep away from moving parts.
- Keep away from pinch points such as drive rolls.

WELDING WIRE can injure.

- Do not press gun trigger until instructed to do so.
- Do not point gun toward any part of the body, other people, or any metal when threading welding wire.

MOVING PARTS can injure.

- Keep away from moving parts such as fans.
- Keep all doors, panels, covers, and guards closed and securely in place.
- Have only qualified persons remove doors, panels, covers, or guards for maintenance and troubleshooting as necessary.
- Reinstall doors, panels, covers, or guards when maintenance is finished and before reconnecting input power.

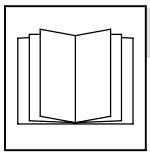

READ INSTRUCTIONS.

- Read and follow all labels and the Owner's Manual carefully before installing, operating, or servicing unit. Read the safety information at the beginning of the manual and in each section.
- Use only genuine replacement parts from the manufacturer.
- Perform maintenance and service according to the Owner's Manuals, industry standards, and national, state, and local codes.

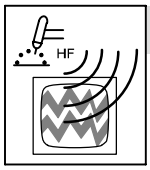

H.F. RADIATION can cause interference.

- High-frequency (H.F.) can interfere with radio navigation, safety services, computers, and communications equipment.
- Have only qualified persons familiar with electronic equipment perform this installation.
- The user is responsible for having a qualified electrician promptly correct any interference problem resulting from the installation.
- If notified by the FCC about interference, stop using the equipment at once.
- Have the installation regularly checked and maintained.
- Keep high-frequency source doors and panels tightly shut, keep spark gaps at correct setting, and use grounding and shielding to minimize the possibility of interference.

ARC WELDING can cause interference.

- Electromagnetic energy can interfere with sensitive electronic equipment such as computers and computer-driven equipment such as robots.
- Be sure all equipment in the welding area is electromagnetically compatible.
- To reduce possible interference, keep weld cables as short as possible, close together, and down low, such as on the floor.
- Locate welding operation 100 meters from any sensitive electronic equipment.
- Be sure this welding machine is installed and grounded according to this manual.
- If interference still occurs, the user must take extra measures such as moving the welding machine, using shielded cables, using line filters, or shielding the work area.

1-4. California Proposition 65 Warnings

Welding or cutting equipment produces fumes or gases which contain chemicals known to the State of California to cause birth defects and, in some cases, cancer. (California Health & Safety Code Section 25249.5 et seq.)

Battery posts, terminals and related accessories contain lead and lead compounds, chemicals known to the State of California to cause cancer and birth defects or other reproductive harm. *Wash hands after handling.*

This product contains chemicals, including lead, known to the state of California to cause cancer, birth defects, or other reproductive harm. *Wash hands after use.*

For Gasoline Engines:

Engine exhaust contains chemicals known to the State of California to cause cancer, birth defects, or other reproductive harm.

For Diesel Engines:

Diesel engine exhaust and some of its constituents are known to the State of California to cause cancer, birth defects, and other reproductive harm.

1-5. Principal Safety Standards

Safety in Welding, Cutting, and Allied Processes, ANSI Standard Z49.1, from Global Engineering Documents (phone: 1-877-413-5184, website: www.global.ihs.com).

Safe Practices for the Preparation of Containers and Piping for Welding and Cutting, American Welding Society Standard AWS F4.1, from Global Engineering Documents (phone: 1-877-413-5184, website: www.global.ihs.com).

National Electrical Code, NFPA Standard 70, from National Fire Protection Association, Quincy, MA 02269 (phone: 1-800-344-3555, website: www.nfpa.org and www. sparky.org).

Safe Handling of Compressed Gases in Cylinders, CGA Pamphlet P-1, from Compressed Gas Association, 4221 Walney Road, 5th Floor, Chantilly, VA 20151 (phone: 703-788-2700, website:www.cganet.com).

Safety in Welding, Cutting, and Allied Processes, CSA Standard W117.2, from Canadian Standards Association, Standards Sales, 5060 Spectrum Way, Suite 100, Ontario, Canada L4W 5NS (phone: 800-463-6727, website: www.csa-international.org).

Safe Practice For Occupational And Educational Eye And Face Protection, ANSI Standard Z87.1, from American National Standards Institute, 25 West 43rd Street, New York, NY 10036 (phone: 212-642-4900, website: www.ansi.org).

Standard for Fire Prevention During Welding, Cutting, and Other Hot Work, NFPA Standard 51B, from National Fire Protection Association, Quincy, MA 02269 (phone: 1-800-344-3555, website: www.nfpa.org.

OSHA, Occupational Safety and Health Standards for General Industry, Title 29, Code of Federal Regulations (CFR), Part 1910, Subpart Q, and Part 1926, Subpart J, from U.S. Government Printing Office, Superintendent of Documents, P.O. Box 371954, Pittsburgh, PA 15250-7954 (phone: 1-866-512-1800) (there are 10 OSHA Regional Offices—phone for Region 5, Chicago, is 312-353-2220, website: www.osha.gov).

U.S. Consumer Product Safety Commission (CPSC), 4330 East West Highway, Bethesda, MD 20814 (phone: 301-504-7923, website: www.cpsc.gov).

Applications Manual for the Revised NIOSH Lifting Equation, The National Institute for Occupational Safety and Health (NIOSH), 1600 Clifton Rd, Atlanta, GA 30333 (phone: 1-800-232-4636, website: www.cdc.gov/NIOSH).

1-6. EMF Information

Electric current flowing through any conductor causes localized electric and magnetic fields (EMF). Welding current creates an EMF field around the welding circuit and welding equipment. EMF fields may interfere with some medical implants, e.g. pacemakers. Protective measures for persons wearing medical implants have to be taken. For example, access restrictions for passers–by or individual risk assessment for welders. All welders should use the following procedures in order to minimize exposure to EMF fields from the welding circuit:

1. Keep cables close together by twisting or taping them, or using a cable cover.
2. Do not place your body between welding cables. Arrange cables to one side and away from the operator.
3. Do not coil or drape cables around your body.
4. Keep head and trunk as far away from the equipment in the welding circuit as possible.
5. Connect work clamp to workpiece as close to the weld as possible.
6. Do not work next to, sit or lean on the welding power source.
7. Do not weld whilst carrying the welding power source or wire feeder.

About Implanted Medical Devices:

Implanted Medical Device wearers should consult their doctor and the device manufacturer before performing or going near arc welding, spot welding, gouging, plasma arc cutting, or induction heating operations. If cleared by your doctor, then following the above procedures is recommended.

SECTION 2 – CONSIGNES DE SÉCURITÉ – LIRE AVANT UTILISATION

Se protéger et protéger les autres contre le risque de blessure — lire et respecter ces consignes.

2-1. Symboles utilisés

DANGER! – Indique une situation dangereuse qui si on l'évite pas peut donner la mort ou des blessures graves. Les dangers possibles sont montrés par les symboles joints ou sont expliqués dans le texte.

Indique une situation dangereuse qui si on l'évite pas peut donner la mort ou des blessures graves. Les dangers possibles sont montrés par les symboles joints ou sont expliqués dans le texte.

NOTE *– Indique des déclarations pas en relation avec des blessures personnelles.*

☞ *Indique des instructions spécifiques.*

Ce groupe de symboles veut dire Avertissement! Attention! DANGER DE CHOC ELECTRIQUE, PIECES EN MOUVEMENT, et PIECES CHAUDES. Consulter les symboles et les instructions ci-dessous y afférant pour les actions nécessaires afin d'éviter le danger.

2-2. Dangers relatifs au soudage à l'arc

Les symboles représentés ci-dessous sont utilisés dans ce manuel pour attirer l'attention et identifier les dangers possibles. En présence de l'un de ces symboles, prendre garde et suivre les instructions afférentes pour éviter tout risque. Les instructions en matière de sécurité indiquées ci-dessous ne constituent qu'un sommaire des instructions de sécurité plus complètes fournies dans les normes de sécurité énumérées dans la Section 2-5. Lire et observer toutes les normes de sécurité.

Seul un personnel qualifié est autorisé à installer, faire fonctionner, entretenir et réparer cet appareil.

Pendant le fonctionnement, maintenir à distance toutes les personnes, notamment les enfants de l'appareil.

UNE DÉCHARGE ÉLECTRIQUE peut entraîner la mort.

Le contact d'organes électriques sous tension peut provoquer des accidents mortels ou des brûlures graves. Le circuit de l'électrode et de la pièce est sous tension lorsque le courant est délivré à la sortie. Le circuit d'alimentation et les circuits internes de la machine sont également sous tension lorsque l'alimentation est sur Marche. Dans le mode de soudage avec du fil, le fil, le dérouleur, le bloc de commande du rouleau et toutes les parties métalliques en contact avec le fil sont sous tension électrique. Un équipement installé ou mis à la terre de manière incorrecte ou impropre constitue un danger.

- Ne pas toucher aux pièces électriques sous tension.
- Porter des gants isolants et des vêtements de protection secs et sans trous.
- S'isoler de la pièce à couper et du sol en utilisant des housses ou des tapis assez grands afin d'éviter tout contact physique avec la pièce à couper ou le sol.
- Ne pas se servir de source électrique à courant électrique dans les zones humides, dans les endroits confinés ou là où on risque de tomber.
- Se servir d'une source électrique à courant électrique UNIQUEMENT si le procédé de soudage le demande.
- Si l'utilisation d'une source électrique à courant électrique s'avère nécessaire, se servir de la fonction de télécommande si l'appareil en est équipé.
- D'autres consignes de sécurité sont nécessaires dans les conditions suivantes : risques électriques dans un environnement humide ou si l'on porte des vêtements mouillés ; sur des structures métalliques telles que sols, grilles ou échafaudages ; en position coincée comme assise, à genoux ou couchée ; ou s'il y a un risque élevé de contact inévitable ou accidentel avec la pièce à souder ou le sol. Dans ces conditions, utiliser les équipements suivants, dans l'ordre indiqué : 1) un poste à souder DC à tension constante (à fil), 2) un poste à souder DC manuel (électrode) ou 3) un poste à souder AC à tension à vide réduite. Dans la plupart des situations, l'utilisation d'un poste à souder DC à fil à tension constante est recommandée. En outre, ne pas travailler seul !
- Couper l'alimentation ou arrêter le moteur avant de procéder à l'installation, à la réparation ou à l'entretien de l'appareil. Déverrouiller l'alimentation selon la norme OSHA 29 CFR 1910.147 (voir normes de sécurité).
- Installer le poste correctement et le mettre à la terre convenablement selon les consignes du manuel de l'opérateur et les normes nationales, provinciales et locales.
- Toujours vérifier la terre du cordon d'alimentation. Vérifier et s'assurer que le fil de terre du cordon d'alimentation est bien raccordé à la borne de terre du sectionneur ou que la fiche du cordon est raccordée à une prise correctement mise à la terre.
- En effectuant les raccordements d'entrée, fixer d'abord le conducteur de mise à la terre approprié et contre-vérifier les connexions.
- Les câbles doivent être exempts d'humidité, d'huile et de graisse; protégez–les contre les étincelles et les pièces métalliques chaudes.
- Vérifier fréquemment le cordon d'alimentation afin de s'assurer qu'il n'est pas altéré ou à nu, le remplacer immédiatement s'il l'est. Un fil à nu peut entraîner la mort.
- L'équipement doit être hors tension lorsqu'il n'est pas utilisé.
- Ne pas utiliser des câbles usés, endommagés, de grosseur insuffisante ou mal épissés.
- Ne pas enrouler les câbles autour du corps.
- Si la pièce soudée doit être mise à la terre, le faire directement avec un câble distinct.
- Ne pas toucher l'électrode quand on est en contact avec la pièce, la terre ou une électrode provenant d'une autre machine.
- Ne pas toucher des porte électrodes connectés à deux machines en même temps à cause de la présence d'une tension à vide doublée.
- N'utiliser qu'un matériel en bon état. Réparer ou remplacer sur-le-champ les pièces endommagées. Entretenir l'appareil conformément à ce manuel.
- Porter un harnais de sécurité si l'on doit travailler au-dessus du sol.
- S'assurer que tous les panneaux et couvercles sont correctement en place.
- Fixer le câble de retour de façon à obtenir un bon contact métal-métal avec la pièce à souder ou la table de travail, le plus près possible de la soudure.
- Isoler la pince de masse quand pas mis à la pièce pour éviter le contact avec tout objet métallique.
- Ne pas raccorder plus d'une électrode ou plus d'un câble de masse à une même borne de sortie de soudage.

Il reste une TENSION DC NON NÉGLIGEABLE dans les sources de soudage onduleur UNE FOIS l'alimentation coupée.

- Arrêter les convertisseurs, débrancher le courant électrique et décharger les condensateurs d'alimentation selon les instructions indiquées dans la partie Entretien avant de toucher les pièces.

LES PIÈCES CHAUDES peuvent provoquer des brûlures.

- Ne pas toucher à mains nues les parties chaudes.
- Prévoir une période de refroidissement avant de travailler à l'équipement.
- Ne pas toucher aux pièces chaudes, utiliser les outils recommandés et porter des gants de soudage et des vêtements épais pour éviter les brûlures.

LES FUMÉES ET LES GAZ peuvent être dangereux.

Le soudage génère des fumées et des gaz. Leur inhalation peut être dangereux pour votre santé.

- Eloigner votre tête des fumées. Ne pas respirer les fumées.
- À l'intérieur, ventiler la zone et/ou utiliser une ventilation forcée au niveau de l'arc pour l'évacuation des fumées et des gaz de soudage.
- Si la ventilation est médiocre, porter un respirateur anti-vapeurs approuvé.
- Lire et comprendre les spécifications de sécurité des matériaux (MSDS) et les instructions du fabricant concernant les métaux, les consommables, les revêtements, les nettoyants et les dégraisseurs.
- Travailler dans un espace fermé seulement s'il est bien ventilé ou en portant un respirateur à alimentation d'air. Demander toujours à un surveillant dûment formé de se tenir à proximité. Des fumées et des gaz de soudage peuvent déplacer l'air et abaisser le niveau d'oxygène provoquant des blessures ou des accidents mortels. S'assurer que l'air de respiration ne présente aucun danger.
- Ne pas souder dans des endroits situés à proximité d'opérations de dégraissage, de nettoyage ou de pulvérisation. La chaleur et les rayons de l'arc peuvent réagir en présence de vapeurs et former des gaz hautement toxiques et irritants.
- Ne pas souder des métaux munis d'un revêtement, tels que l'acier galvanisé, plaqué en plomb ou au cadmium à moins que le revêtement n'ait été enlevé dans la zone de soudure, que l'endroit soit bien ventilé, et en portant un respirateur à alimentation d'air. Les revêtements et tous les métaux renfermant ces éléments peuvent dégager des fumées toxiques en cas de soudage.

LES RAYONS DE L'ARC peuvent provoquer des brûlures dans les yeux et sur la peau.

Le rayonnement de l'arc du procédé de soudag génère des rayons visibles et invisibles intense (ultraviolets et infrarouges) susceptibles de provoquer des brûlure dans les yeux et sur la peau. Des étincelles sont projetées pendant l soudage.

- Porter un casque de soudage approuvé muni de verres filtrants approprié pour protéger visage et yeux pour protéger votre visage et vos yeux pendant le soudage ou pour regarder (voir ANSI Z49.1 et Z87.1 énuméré dans les normes de sécurité).
- Porter des lunettes de sécurité avec écrans latéraux même sous votre casque.
- Avoir recours à des écrans protecteurs ou à des rideaux pour protéger les autres contre les rayonnements les éblouissements et les étincelles ; prévenir toute personne sur les lieux de ne pas regarder l'arc.
- Porter des vêtements confectionnés avec des matières résistantes et ignifuges (cuir, coton lourd ou laine) et des bottes de protection.

LE SOUDAGE peut provoquer un incendie ou une explosion.

Le soudage effectué sur des conteneurs fermés tels que des réservoirs, tambours ou des conduites peut provoquer leur éclatement. Des étincelles peuvent être projetées de l'arc de soudure. La projection d'étincelles, des pièces chaudes et des équipements chauds peut provoquer des incendies et des brûlures. Le contact accidentel de l'électrode avec des objets métalliques peut provoquer des étincelles, une explosion, un surchauffement ou un incendie. Avant de commencer le soudage, vérifier et s'assurer que l'endroit ne présente pas de danger.

- Déplacer toutes les substances inflammables à une distance de 10,7 m de l'arc de soudure. En cas d'impossibilité les recouvrir soigneusement avec des protections homologués.
- Ne pas souder dans un endroit là où des étincelles peuvent tomber sur des substances inflammables.
- Se protéger et d'autres personnes de la projection d'étincelles et de métal chaud.
- Des étincelles et des matériaux chauds du soudage peuvent facilement passer dans d'autres zones en traversant de petites fissures et des ouvertures.
- Surveiller tout déclenchement d'incendie et tenir un extincteur à proximité.
- Le soudage effectué sur un plafond, plancher, paroi ou séparation peut déclencher un incendie de l'autre côté.
- Ne pas effectuer le soudage sur des conteneurs fermés tels que des réservoirs, tambours, ou conduites, à moins qu'ils n'aient été préparés correctement conformément à AWS F4.1 (voir les normes de sécurité).
- Ne soudez pas si l'air ambiant est chargé de particules, gaz, ou vapeurs inflammables (vapeur d'essence, par exemple).
- Brancher le câble de masse sur la pièce le plus près possible de la zone de soudage pour éviter le transport du courant sur une longue distance par des chemins inconnus éventuels en provoquant des risques d'électrocution, d'étincelles et d'incendie.
- Ne pas utiliser le poste de soudage pour dégeler des conduites gelées.
- En cas de non utilisation, enlever la baguette d'électrode du porte-électrode ou couper le fil à la pointe de contact.
- Porter des vêtements de protection dépourvus d'huile tels que des gants en cuir, une chemise en matériau lourd, des pantalons sans revers, des chaussures hautes et un couvre chef.
- Avant de souder, retirer toute substance combustible de vos poches telles qu'un allumeur au butane ou des allumettes.
- Une fois le travail achevé, assurez–vous qu'il ne reste aucune trace d'étincelles incandescentes ni de flammes.
- Utiliser exclusivement des fusibles ou coupe–circuits appropriés. Ne pas augmenter leur puissance; ne pas les ponter.
- Une fois le travail achevé, assurez–vous qu'il ne reste aucune trace d'étincelles incandescentes ni de flammes.
- Utiliser exclusivement des fusibles ou coupe–circuits appropriés. Ne pas augmenter leur puissance; ne pas les ponter.
- Suivre les recommandations dans OSHA 1910.252(a)(2)(iv) et NFPA 51B pour les travaux à chaud et avoir de la surveillance et un extincteur à proximité.

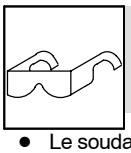

DES PIECES DE METAL ou DES SALETES peuvent provoquer des blessures dans les yeux.

- Le soudage, l'écaillement, le passage de la pièce à la brosse en fil de fer, et le meulage génèrent des étincelles et des particules métalliques volantes. Pendant la période de refroidissement des soudures, elles risquent de projeter du laitier.
- Porter des lunettes de sécurité avec écrans latéraux ou un écran facial.

LES ACCUMULATIONS DE GAZ risquent de provoquer des blessures ou même la mort.

- Fermer l'alimentation du gaz protecteur en cas de non-utilisation.
- Veiller toujours à bien aérer les espaces confinés ou se servir d'un respirateur d'adduction d'air homologué.

Les CHAMPS ÉLECTROMAGNÉTIQUES (CEM) peuvent affecter les implants médicaux.

- Les porteurs de stimulateurs cardiaques et autres implants médicaux doivent rester à distance.
- Les porteurs d'implants médicaux doivent consulter leur médecin et le fabricant du dispositif avant de s'approcher de la zone où se déroule du soudage à l'arc, du soudage par points, du gougeage, de la découpe plasma ou une opération de chauffage par induction.

LE BRUIT peut endommager l'ouïe.

Le bruit des processus et des équipements peut affecter l'ouïe.

- Porter des protections approuvées pour les oreilles si le niveau sonore est trop élevé.

LES BOUTEILLES peuvent exploser si elles sont endommagées.

Des bouteilles de gaz protecteur contiennent du gaz sous haute pression. Si une bouteille est endommagée, elle peut exploser. Du fait que les bouteilles de gaz font normalement partie du procédé de soudage, les manipuler avec précaution.

- Protéger les bouteilles de gaz comprimé d'une chaleur excessive, des chocs mécaniques, des dommages physiques, du laitier, des flammes ouvertes, des étincelles et des arcs.
- Placer les bouteilles debout en les fixant dans un support stationnaire ou dans un porte-bouteilles pour les empêcher de tomber ou de se renverser.
- Tenir les bouteilles éloignées des circuits de soudage ou autres circuits électriques.
- Ne jamais placer une torche de soudage sur une bouteille à gaz.
- Une électrode de soudage ne doit jamais entrer en contact avec une bouteille.
- Ne jamais souder une bouteille pressurisée – risque d'explosion.
- Utiliser seulement des bouteilles de gaz protecteur, régulateurs, tuyaux et raccords convenables pour cette application spécifique ; les maintenir ainsi que les éléments associés en bon état.
- Détourner votre visage du détendeur-régulateur lorsque vous ouvrez la soupape de la bouteille.
- Le couvercle du détendeur doit toujours être en place, sauf lorsque la bouteille est utilisée ou qu'elle est reliée pour usage ultérieur.
- Utiliser les équipements corrects, les bonnes procédures et suffisamment de personnes pour soulever et déplacer les bouteilles.
- Lire et suivre les instructions sur les bouteilles de gaz comprimé, l'équipement connexe et le dépliant P-1 de la CGA (Compressed Gas Association) mentionné dans les principales normes de sécurité.

2-3. Dangers supplémentaires en relation avec l'installation, le fonctionnement et la maintenance

Risque D'INCENDIE OU D'EXPLOSION.

- Ne pas placer l'appareil sur, au-dessus ou à proximité de surfaces inflammables.
- Ne pas installer l'appareil à proximité de produits inflammables.
- Ne pas surcharger l'installation électrique – s'assurer que l'alimentation est correctement dimensionnée et protégée avant de mettre l'appareil en service.

LA CHUTE DE L'ÉQUIPEMENT peut provoquer des blessures.

- Utiliser l'anneau de levage uniquement pour soulever l'appareil, NON PAS les chariots, les bouteilles de gaz ou tout autre accessoire.
- Utiliser un équipement de levage de capacité suffisante pour lever l'appareil.
- En utilisant des fourches de levage pour déplacer l'unité, s'assurer que les fourches sont suffisamment longues pour dépasser du côté opposé de l'appareil.
- Tenir l'équipement (câbles et cordons) à distance des véhicules mobiles lors de toute opération en hauteur.
- Suivre les consignes du Manuel des applications pour l'équation de levage NIOSH révisée (Publication Nº94–110) lors du levage manuelle de pièces ou équipements lourds.

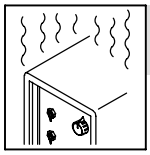

L'EMPLOI EXCESSIF peut SURCHAUFFER L'ÉQUIPEMENT.

- Prévoir une période de refroidissement ; respecter le cycle opératoire nominal.
- Réduire le courant ou le facteur de marche avant de poursuivre le soudage.
- Ne pas obstruer les passages d'air du poste.

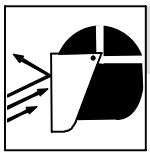

LES ÉTINCELLES PROJETÉES peuvent provoquer des blessures.

- Porter un écran facial pour protéger le visage et les yeux.
- Affûter l'électrode au tungstène uniquement à la meuleuse dotée de protecteurs. Cette manœuvre est à exécuter dans un endroit sûr lorsque l'on porte l'équipement homologué de protection du visage, des mains et du corps.
- Les étincelles risquent de causer un incendie – éloigner toute substance inflammable.

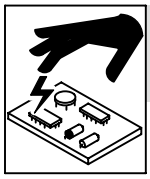

LES CHARGES ÉLECTROSTATIQUES peuvent endommager les circuits imprimés.

- Établir la connexion avec la barrette de terre avant de manipuler des cartes ou des pièces.
- Utiliser des pochettes et des boîtes antistatiques pour stocker, déplacer ou expédier des cartes de circuits imprimes.

Les PIÈCES MOBILES peuvent causer des blessures.

- Ne pas s'approcher des organes mobiles.
- Ne pas s'approcher des points de coincement tels que des rouleaux de commande.

LES FILS DE SOUDAGE peuvent provoquer des blessures.

- Ne pas appuyer sur la gâchette avant d'en avoir reçu l'instruction.
- Ne pas diriger le pistolet vers soi, d'autres personnes ou toute pièce mécanique en engageant le fil de soudage.

Les PIÈCES MOBILES peuvent causer des blessures.

- S'abstenir de toucher des organes mobiles tels que des ventilateurs.
- Maintenir fermés et verrouillés les portes, panneaux, recouvrements et dispositifs de protection.
- Lorsque cela est nécessaire pour des travaux d'entretien et de dépannage, faire retirer les portes, panneaux, recouvrements ou dispositifs de protection uniquement par du personnel qualifié.
- Remettre les portes, panneaux, recouvrements ou dispositifs de protection quand l'entretien est terminé et avant de rebrancher l'alimentation électrique.

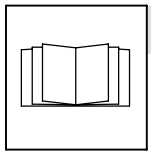

LIRE LES INSTRUCTIONS.

- Lire et appliquer les instructions sur les étiquettes et le Mode d'emploi avant l'installation, l'utilisation ou l'entretien de l'appareil. Lire les informations de sécurité au début du manuel et dans chaque section.
- N'utiliser que les pièces de rechange recommandées par le constructeur.
- Effectuer l'entretien en respectant les manuels d'utilisation, les normes industrielles et les codes nationaux, d'état et locaux.

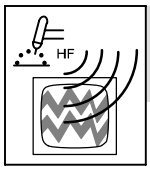

LE RAYONNEMENT HAUTE FRÉQUENCE (H.F.) risque de provoquer des interférences.

- Le rayonnement haute fréquence (H.F.) peut provoquer des interférences avec les équipements de radio–navigation et de communication, les services de sécurité et les ordinateurs.
- Demander seulement à des personnes qualifiées familiarisées avec des équipements électroniques de faire fonctionner l'installation.
- L'utilisateur est tenu de faire corriger rapidement par un électricien qualifié les interférences résultant de l'installation.
- Si le FCC signale des interférences, arrêter immédiatement l'appareil.
- Effectuer régulièrement le contrôle et l'entretien de l'installation.
- Maintenir soigneusement fermés les portes et les panneaux des sources de haute fréquence, maintenir les éclateurs à une distance correcte et utiliser une terre et un blindage pour réduire les interférences éventuelles.

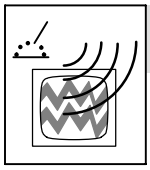

LE SOUDAGE À L'ARC risque de provoquer des interférences.

- L'énergie électromagnétique risque de provoquer des interférences pour l'équipement électronique sensible tel que les ordinateurs et l'équipement commandé par ordinateur tel que les robots.
- Veiller à ce que tout l'équipement de la zone de soudage soit compatible électromagnétiquement.
- Pour réduire la possibilité d'interférence, maintenir les câbles de soudage aussi courts que possible, les grouper, et les poser aussi bas que possible (ex. par terre).
- Veiller à souder à une distance de 100 mètres de tout équipement électronique sensible.
- Veiller à ce que ce poste de soudage soit posé et mis à la terre conformément à ce mode d'emploi.
- En cas d'interférences après avoir pris les mesures précédentes, il incombe à l'utilisateur de prendre des mesures supplémentaires telles que le déplacement du poste, l'utilisation de câbles blindés, l'utilisation de filtres de ligne ou la pose de protecteurs dans la zone de travail.

2-4. Proposition californienne 65 Avertissements

Les équipements de soudage et de coupage produisent des fumées et des gaz qui contiennent des produits chimiques dont l'État de Californie reconnaît qu'ils provoquent des malformations congénitales et, dans certains cas, des cancers. (Code de santé et de sécurité de Californie, chapitre 25249.5 et suivants)

Les batteries, les bornes et autres accessoires contiennent du plomb et des composés à base de plomb, produits chimiques dont l'État de Californie reconnaît qu'ils provoquent des cancers et des malformations congénitales ou autres problèmes de procréation. Se laver les mains après manipulation.

Ce produit contient des produits chimiques, notamment du plomb, dont l'État de Californie reconnaît qu'ils provoquent des cancers, des malformations congénitales ou d'autres problèmes de procréation. *Se laver les mains après utilisation.*

Pour les moteurs à essence :

Les gaz d'échappement des moteurs contiennent des produits chimiques dont l'État de Californie reconnaît qu'ils provoquent des cancers et des malformations congénitales ou autres problèmes de procréation.

Pour les moteurs diesel :

Les gaz d'échappement des moteurs diesel et certains de leurs composants sont reconnus par l'État de Californie comme provoquant des cancers et des malformations congénitales ou autres problèmes de procréation.

2-5. Principales normes de sécurité

Safety in Welding, Cutting, and Allied Processes, ANSI Standard Z49.1, de Global Engineering Documents (téléphone : 1-877-413-5184, site Internet : www.global.ihs.com).

Safe Practices for the Preparation of Containers and Piping for Welding and Cutting, American Welding Society Standard AWS F4.1, de Global Engineering Documents (téléphone : 1-877-413-5184, site internet : www.global.ihs.com).

National Electrical Code, NFPA Standard 70, de National Fire Protection Association, Quincy, MA 02269 (téléphone : 800-344-3555, site Internet : www.nfpa.org et www.sparky.org).

Safe Handling of Compressed Gases in Cylinders, CGA Pamphlet P-1, de Compressed Gas Association, 4221 Walney Road, 5th Floor, Chantilly, VA 20151 (téléphone : 703-788-2700, site Internet : www.cganet.com).

Safety in Welding, Cutting, and Allied Processes, CSA Standard W117.2, de Canadian Standards Association, Standards Sales, 5060 Spectrum Way, Suite 100, Ontario, Canada L4W 5NS (téléphone : 800-463-6727, site internet : www.csa-international.org).

Safe Practice For Occupational And Educational Eye And Face Protection, ANSI Standard Z87.1, de American National Standards Institute, 25 West 43rd Street, New York, NY 10036 (téléphone : 212-642-4900, site Internet : www.ansi.org).

Standard for Fire Prevention During Welding, Cutting, and Other Hot Work, NFPA Standard 51B, de National Fire Protection Association, P.O. Box 9101, Quincy, MA 02269-9101 (téléphone : 617-770-3000, site Internet : www.nfpa.org).

OSHA, Occupational Safety and Health Standards for General Industry, Title 29, Code of Federal Regulations (CFR), Part 1910, Subpart Q, and Part 1926, Subpart J, de U.S. Government Printing Office, Superintendent of Documents, P.O. Box 371954, Pittsburgh, PA 15250-7954 (téléphone : 1-866-512-1800) (il y a 10 bureaux régionaux–le téléphone de la région 5, Chicago, est 312-353-2220, site Internet : www.osha.gov).

U.S. Consumer Product Safety Commission (CPSC), 4330 East West Highway, Bethesda, MD 20814 (téléphone : 301-504-7923, site internet : www.cpsc.gov).

Applications Manual for the Revised NIOSH Lifting Equation, The National Institute for Occupational Safety and Health (NIOSH), 1600 Clifton Rd, Atlanta, GA 30333 (télé[hone : 1-800-232-4636, site internet: www.cdc.gov/NIOSH).

2-6. Informations relatives aux CEM

Le courant électrique qui traverse tout conducteur génère des champs électromagnétiques (CEM) à certains endroits. Le courant de soudage crée un CEM autour du circuit et du matériel de soudage. Les CEM peuvent créer des interférences avec certains implants médicaux comme des stimulateurs cardiaques. Des mesures de protection pour les porteurs d'implants médicaux doivent être prises: par exemple, des restrictions d'accès pour les passants ou une évaluation individuelle des risques pour les soudeurs. Tous les soudeurs doivent appliquer les procédures suivantes pour minimiser l'exposition aux CEM provenant du circuit de soudage:

1. Rassembler les câbles en les torsadant ou en les attachant avec du ruban adhésif ou avec une housse.
2. Ne pas se tenir au milieu des câbles de soudage. Disposer les câbles d'un côté et à distance de l'opérateur.
3. Ne pas courber et ne pas entourer les câbles autour de votre corps.
4. Maintenir la tête et le torse aussi loin que possible du matériel du circuit de soudage.
5. Connecter la pince sur la pièce aussi près que possible de la soudure.
6. Ne pas travailler à proximité d'une source de soudage, ni s'asseoir ou se pencher dessus.
7. Ne pas souder tout en portant la source de soudage ou le dévidoir.

En ce qui concerne les implants médicaux :

Les porteurs d'implants doivent d'abord consulter leur médecin avant de s'approcher des opérations de soudage à l'arc, de soudage par points, de gougeage, du coupage plasma ou de chauffage par induction. Si le médecin approuve, il est recommandé de suivre les procédures précédentes.

SECTION 3 – DEFINITIONS

3-1. Symbols And Definitions

	Wire Feed		Output	X	Duty Cycle		Do Not Switch While Welding
V	Volts		Increase	I	On	O	Off
	Gas Metal Arc Welding (GMAW) Gun		Wire Feed Spool Gun		Gas Input		Gas Output
V	Voltage Input		Press To Reset	U_0	Rated No-Load Voltage (Average)		

SECTION 4 – INSTALLATION

4-1. Welding Power Source And MIG Gun Specifications

Rated Output	Amperage Range DC	Max. Open Circuit Voltage DC	Amps Input at Rated Output, 60 Hz, Single-Phase			
			200 (208) V	230 V	KVA	KW
160 A at 24.5 VDC, 60% Duty Cycle 210 A at 22 VDC 30% Duty Cycle	30-210	34.5	31 1.9*	28 1.7*	6.2 0.39*	5.2 0.25*
***While idling**						

Wire Type and Diameter			Wire Feed Speed	Maximum Spool Size	Dimensions	Net Weight Without Gun
Solid Steel	**Stainless Steel**	**Flux Cored**	50–700 IPM (1.3–17.8 m/min)	12 in. (305 mm) Diameter	H: 30 in. (762 mm) W: 19 in. (483 mm) D: 40 in. (1016 mm)	183 lb (83 kg)
.023 – .035 in. (0.6 – 1.2 mm)	.023 – .035 in. (0.6 – 0.9 mm)	.030 – .045 in. (0.8 – 1.2 mm)				
Operating Temperature Range – –20C to +40C			Storage Temperature Range – -30C to + 50C			

4-2. Welding Power Source Duty Cycle And Overheating

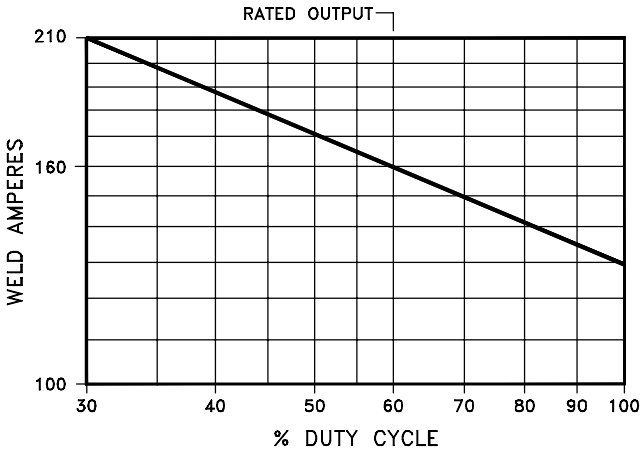

Duty Cycle is percentage of 10 minutes that unit can weld at rated load without overheating.

If unit overheats, thermostat(s) opens, output stops, and cooling fan runs. Wait fifteen minutes for unit to cool. Reduce amperage or voltage, or duty cycle before welding.

NOTICE *– Exceeding duty cycle can damage unit and void warranty.*

60% Duty Cycle At 160 Amperes

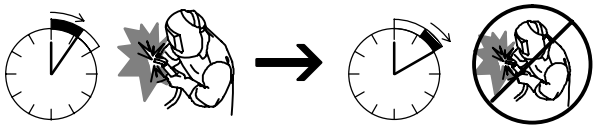

6 Minutes Welding — 4 Minutes Resting

30% Duty Cycle At 210 Amperes

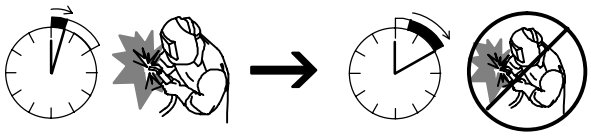

3 Minutes Welding — 7 Minutes Resting

Overheating

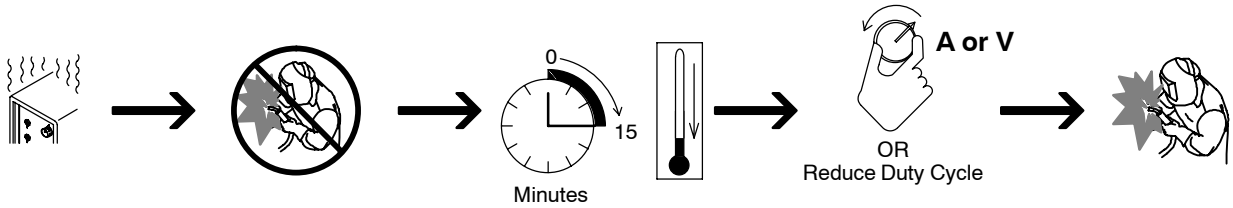

duty1 4/95 – 204 075

4-3. Volt-Ampere Curves

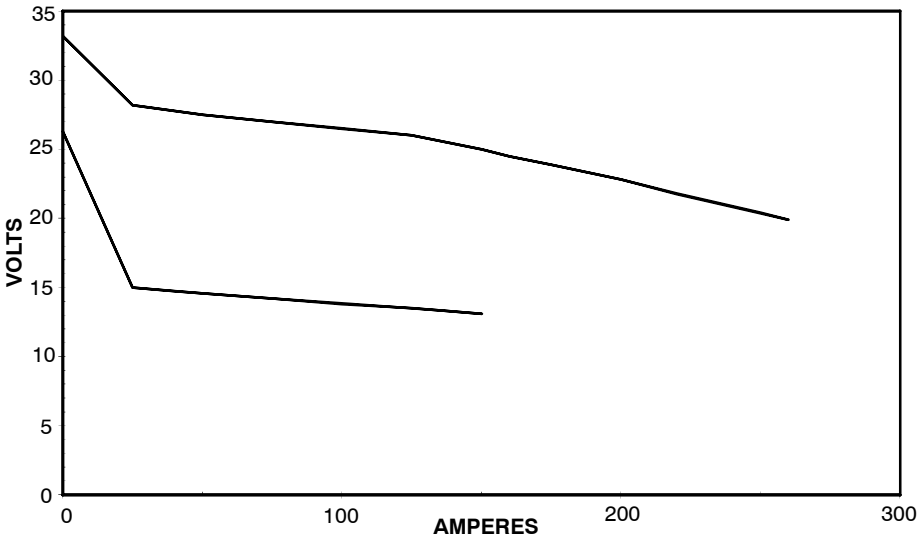

Volt-ampere curves show minimum and maximum voltage and amperage output capabilities of unit. Curves of other settings fall between curves shown.

va_curve1 4/95 – 238 553-A

4-4. Connecting To Weld Output Terminals

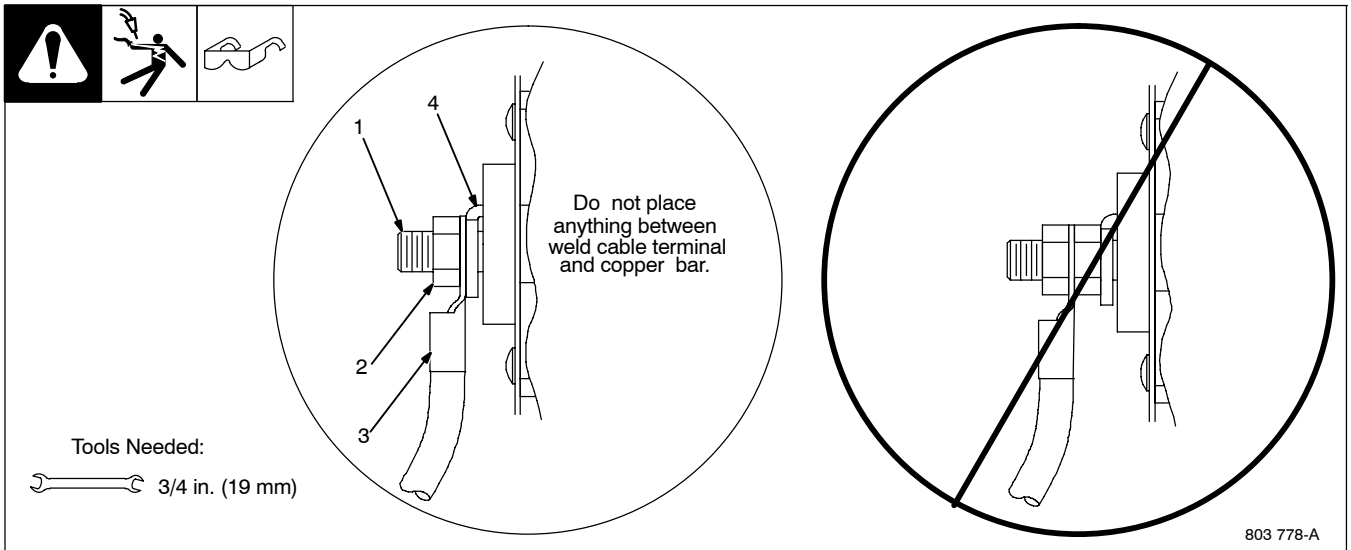

Correct Installation

Incorrect Installation

Tools Needed:

3/4 in. (19 mm)

Turn off power before connecting to weld output terminals.

Failure to properly connect weld cables may cause excessive heat and start a fire, or damage your machine.

1 Weld Output Terminal
2 Supplied Weld Output Terminal Nut
3 Weld Cable Terminal
4 Copper Bar

Remove supplied nut from weld output terminal. Slide weld cable terminal onto weld output terminal and secure with nut so that weld cable terminal is tight against copper bar. **Do not place anything between weld cable terminal and copper bar. Make sure that the surfaces of the weld cable terminal and copper bar are clean.**

4-5. Installing Work Cable And Clamp

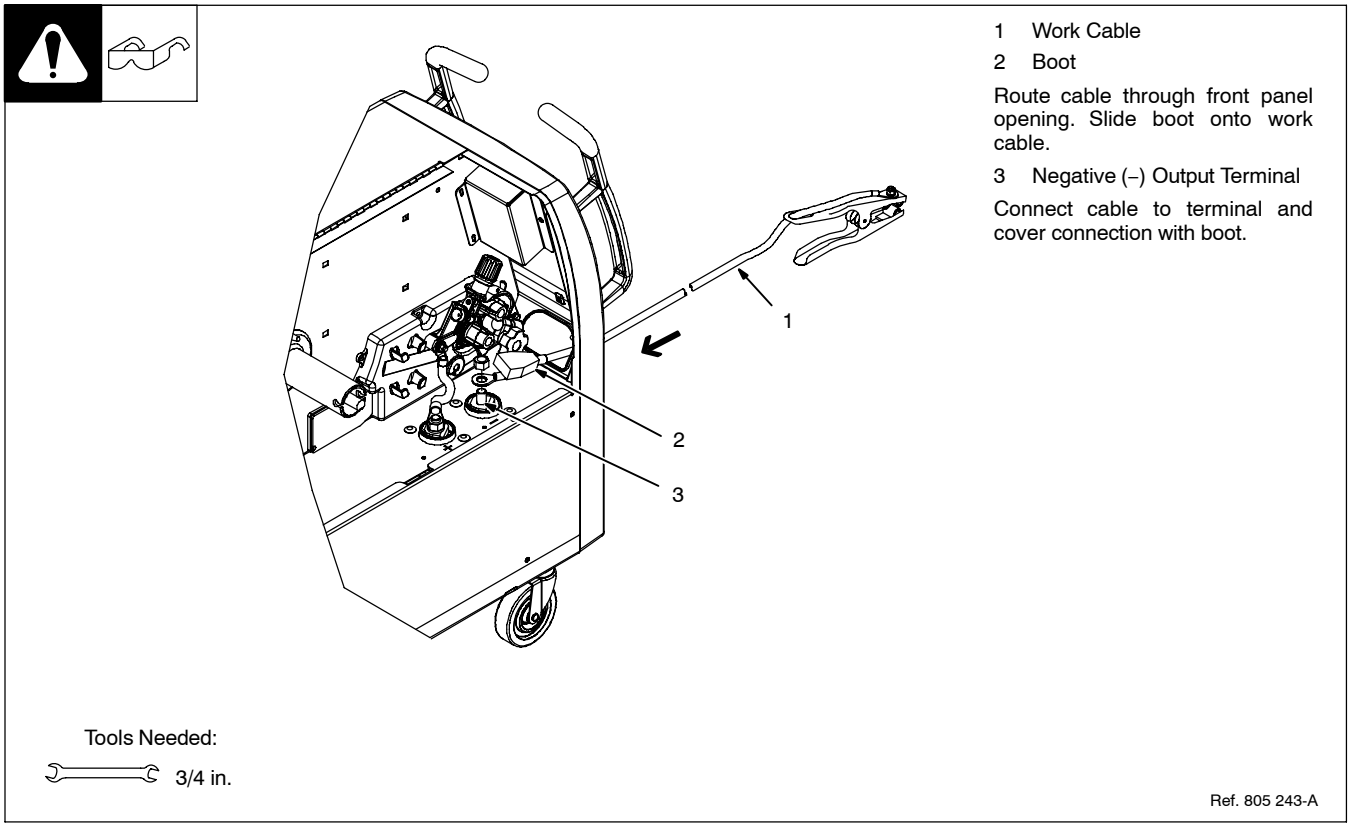

1 Work Cable
2 Boot

Route cable through front panel opening. Slide boot onto work cable.

3 Negative (–) Output Terminal

Connect cable to terminal and cover connection with boot.

Tools Needed:

3/4 in.

4-6. Installing Welding Gun

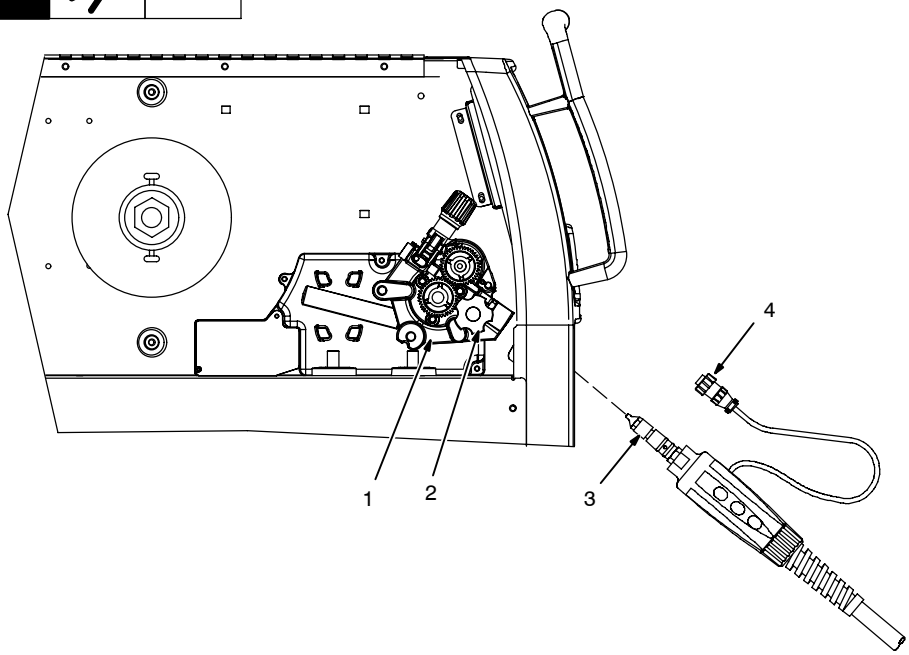

1 Drive Assembly

2 Gun Securing Knob

3 Gun End

Loosen securing knob. Insert gun end through opening until it bottoms against drive assembly (make sure gun end does not touch drive rolls). Tighten knob.

4 Gun Trigger Plug

Insert plug into receptacle, and tighten threaded collar.

Close door.

805 424--A

4-7. Setting Gun Polarity For Wire Type

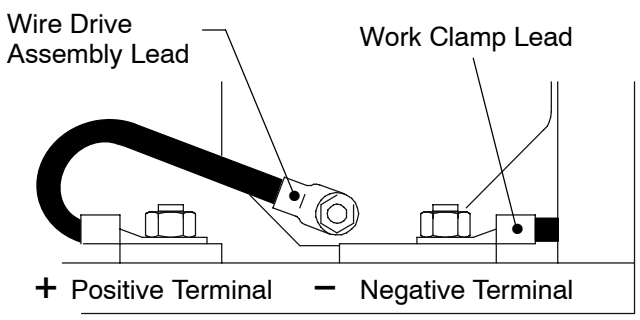

1 Polarity Changeover Label Information

Always read and follow manufacture's recommended polarity.

Shown as shipped – **Electrode Positive** (DCEP): For solid steel, stainless steel, aluminum, or flux core with gas wires (GMAW).

Electrode Negative (DCEN): Reverse lead connections at terminals from that shown above for gasless flux core wires (FCAW). Drive assembly becomes negative.

3/4, 11/16 in.

Ref. 190 821-A

4-8. Connecting Spool Gun

A. Spoolmate 200

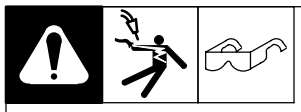

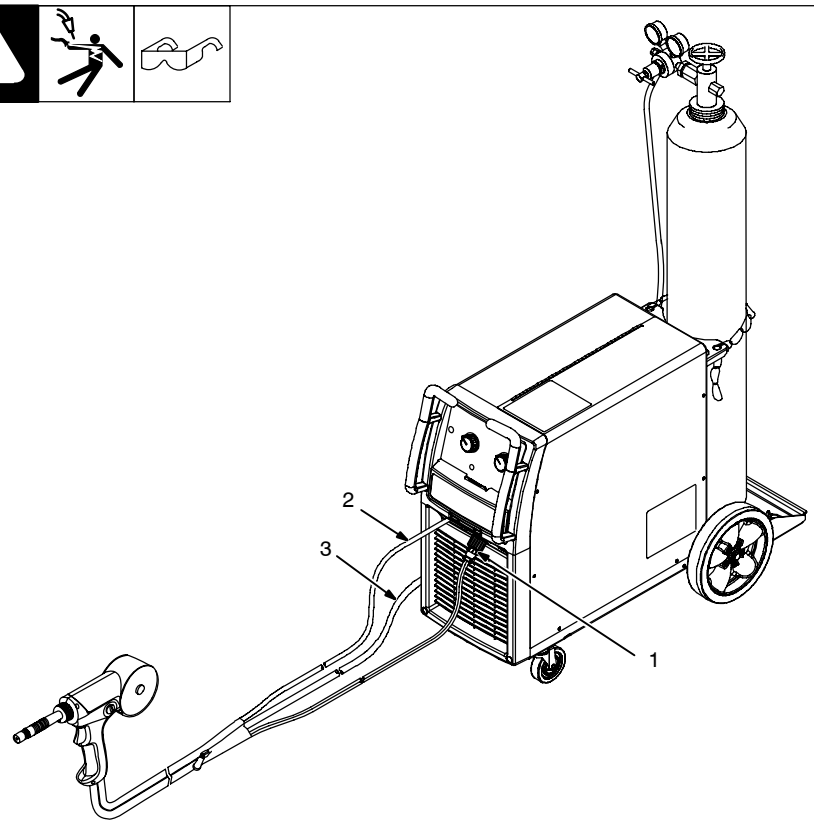

1 Gun Trigger Plug

Insert plug into receptacle, and tighten threaded collar.

2 Weld Cable

3 Shielding Gas Hose

Route weld cable through opening in front panel.

Route gas hose along side panel or if unit has a hole in the rear panel, gas hose can be routed through wire compartment.

4 Positive Weld Output Terminal

Connect weld cable to weld output terminal.

5 Regulator/Flowmeter

Route shielding gas hose up to regulator/flowmeter. Connect gas hose to fitting on regulator/flowmeter.

Two welding guns, a MIG gun and a spool gun, can be connected to the welding power source at the same time, but only one welding gun may be in use at any one time. If the triggers of both welding guns are pulled at the same time, the weld output and wire feed motor are disabled.

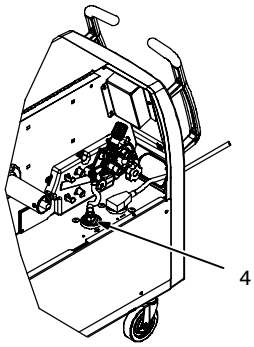

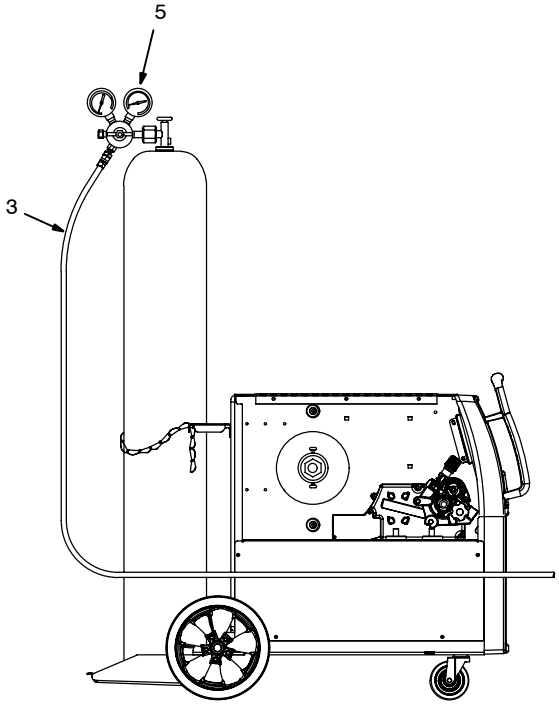

Tools Needed:

3/4, 5/8 in.

805 243-A / 243 737-A

B. Spoolmatic 15A Or 30A

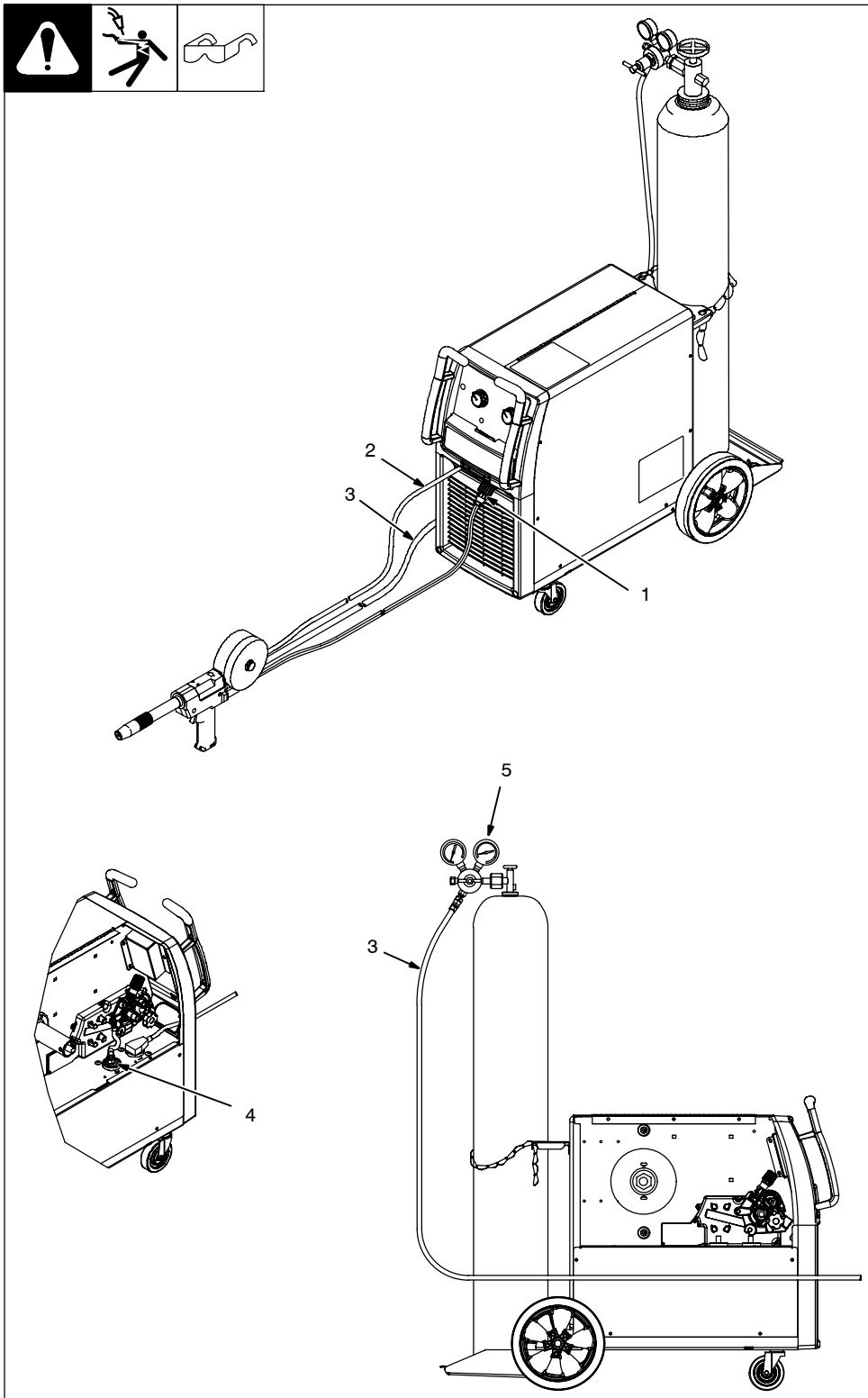

1 Gun Trigger Plug

Insert plug into receptacle, and tighten threaded collar.

2 Weld Cable

3 Shielding Gas Hose

Route weld cable through opening in front panel.

Route gas hose along side panel.

4 Positive Weld Output Terminal

Connect weld cable to weld output terminal.

5 Regulator/Flowmeter

Route shielding gas hose up to regulator/flowmeter Connect gas hose to fitting on regulator/flowmeter.

Two welding guns, a MIG gun and a spool gun, can be connected to the welding power source at the same time, but only one welding gun may be in use at any one time. If the triggers of both welding guns are pulled at the same time, the weld output and wirefeed motor are disabled.

Tools Needed:

3/4, 5/8 in.

805 243-A

4-9. Installing Gas Supply

Tools Needed:

1-1/8, 5/8 in.

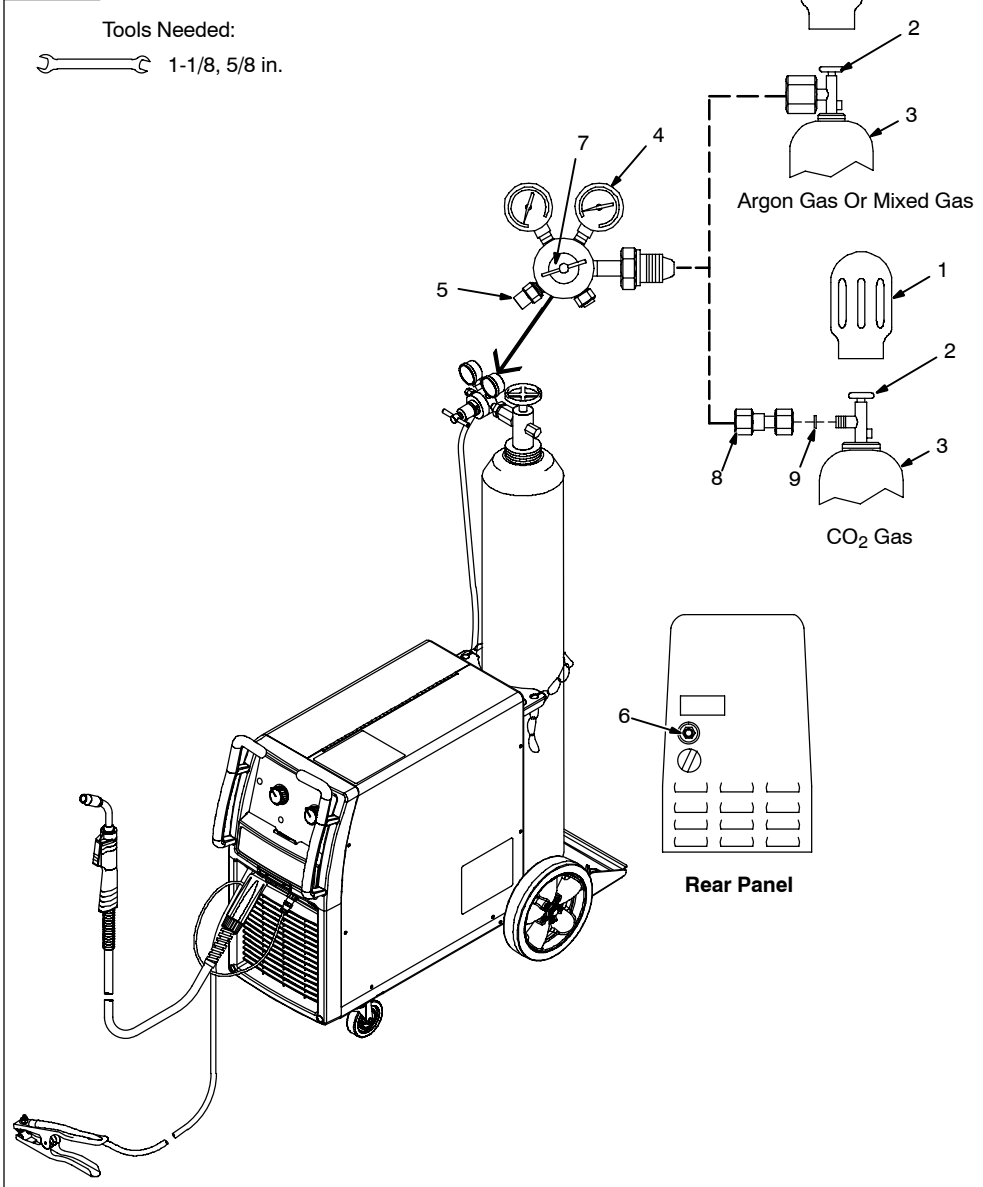

Obtain gas cylinder and chain to running gear, wall, or other stationary support so cylinder cannot fall and break off valve.

1 Cap

2 Cylinder Valve

Remove cap, stand to side of valve, and open valve slightly. Gas flow blows dust and dirt from valve. Close valve.

3 Cylinder

4 Regulator/Flowmeter

Install so face is vertical.

5 Regulator/Flowmeter Gas Hose Connection

6 Welding Power Source Gas Hose Connection

Connect customer supplied gas hose between regulator/flowmeter gas hose connection, and fitting on rear of welding power source.

7 Flow Adjust

Typical flow rate is 25 to 35 cfh (cubic feet per hour). Check wire manufacturer's recommended flow rate.

8 CO2 Adapter (Customer Supplied)

9 O-Ring (Customer Supplied)

Install adapter with O @@@@ ring between regulator/flowmeter and CO_2 cylinder.

Ref. 805 244-A / 804 654-A

4-10. Installing MIG Wire Spool and Adjusting Hub Tension

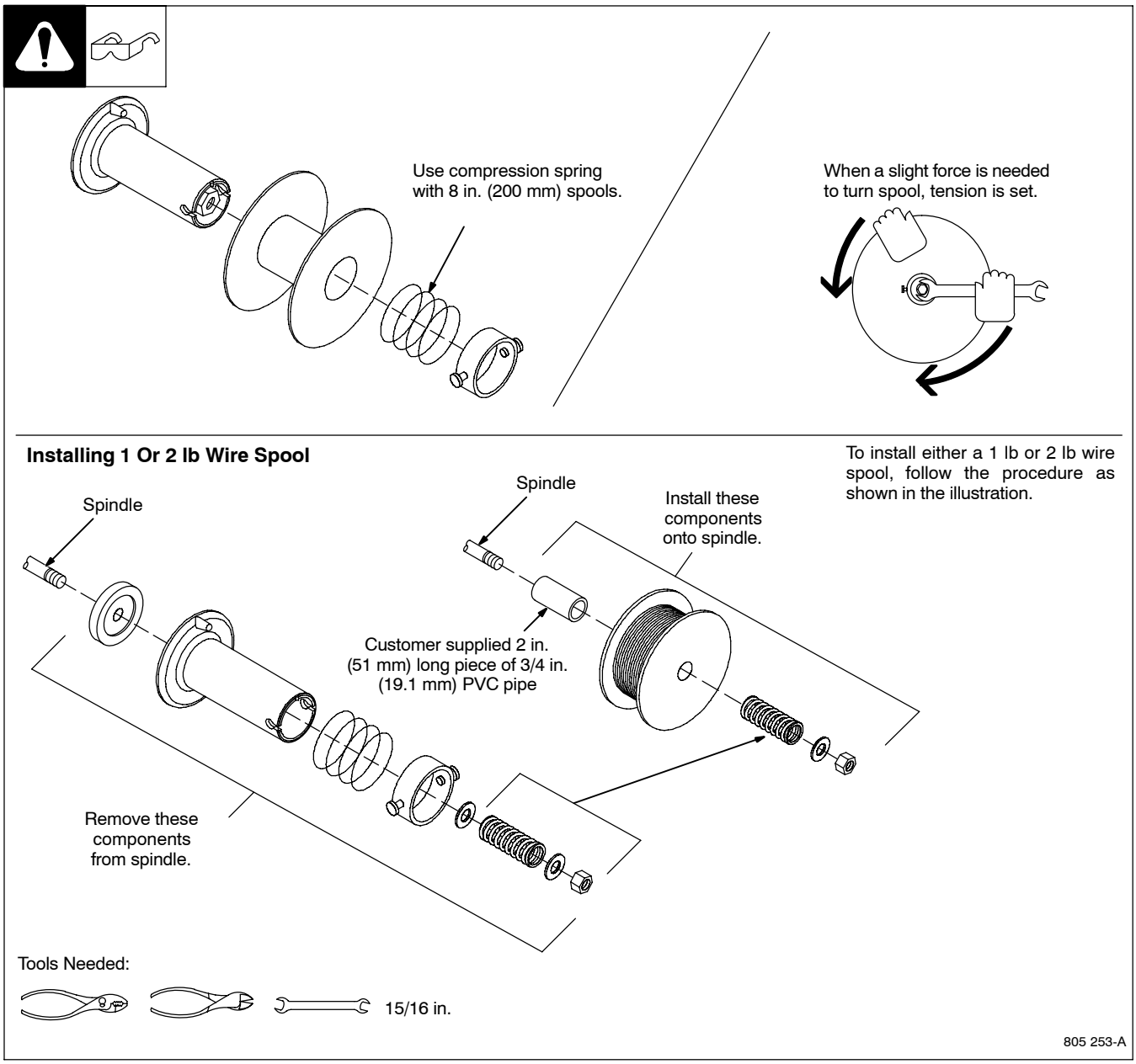

4-11. Positioning Jumper Links

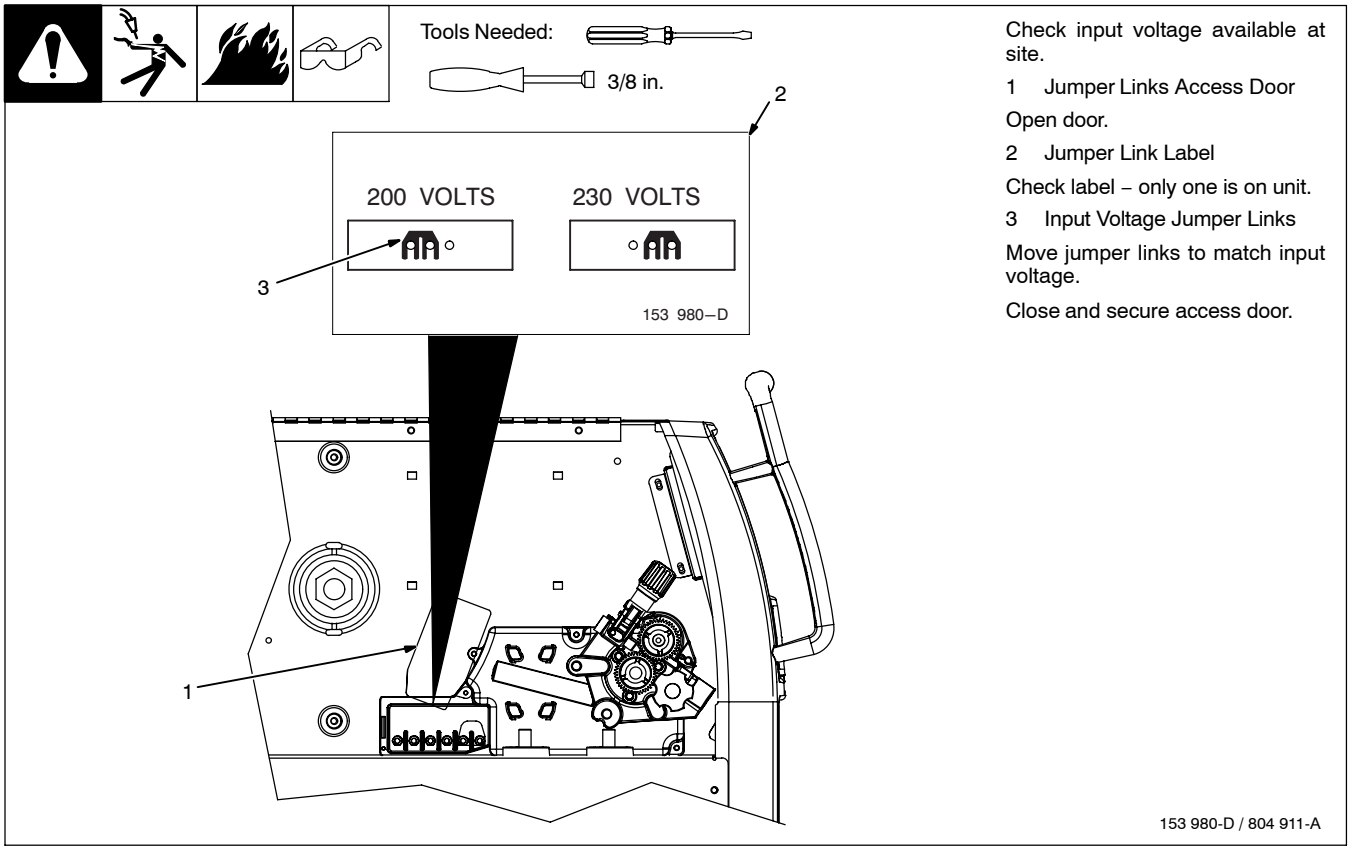

Check input voltage available at site.

1 Jumper Links Access Door

Open door.

2 Jumper Link Label

Check label – only one is on unit.

3 Input Voltage Jumper Links

Move jumper links to match input voltage.

Close and secure access door.

4-12. Electrical Service Guide

Failure to follow these electrical service guide recommendations could create an electric shock or fire hazard. These recommendations are for a dedicated branch circuit sized for the rated output and duty cycle of the welding power source.

	60 Hz Single Phase	
Input Voltage (V)	200	230
Input Amperes (A) At Rated Output	31	28
Max Recommended Standard Fuse Rating In Amperes [1]		
Time-Delay Fuses [2]	35	30
Normal Operating Fuses [3]	45	40
Min Input Conductor Size In AWG [4]	10	10
Max Recommended Input Conductor Length In Feet (Meters)	89 (27)	118 (36)
Min Grounding Conductor Size In AWG [4]	10	10

Reference: 2008 National Electrical Code (NEC) (including article 630)

1 If a circuit breaker is used in place of a fuse, choose a circuit breaker with time-current curves comparable to the recommended fuse.

2 “Time-Delay” fuses are UL class “RK5” . See UL 248.

3 “Normal Operating” (general purpose - no intentional delay) fuses are UL class “K5” (up to and including 60 amps), and UL class “H” (65 amps and above).

4 Conductor data in this section specifies conductor size (excluding flexible cord or cable) between the panelboard and the equipment per NEC Table 310.16. If a flexible cord or cable is used, minimum conductor size may increase. See NEC Table 400.5(A) for flexible cord and cable requirements.

4-13. Selecting A Location And Connecting Input Power

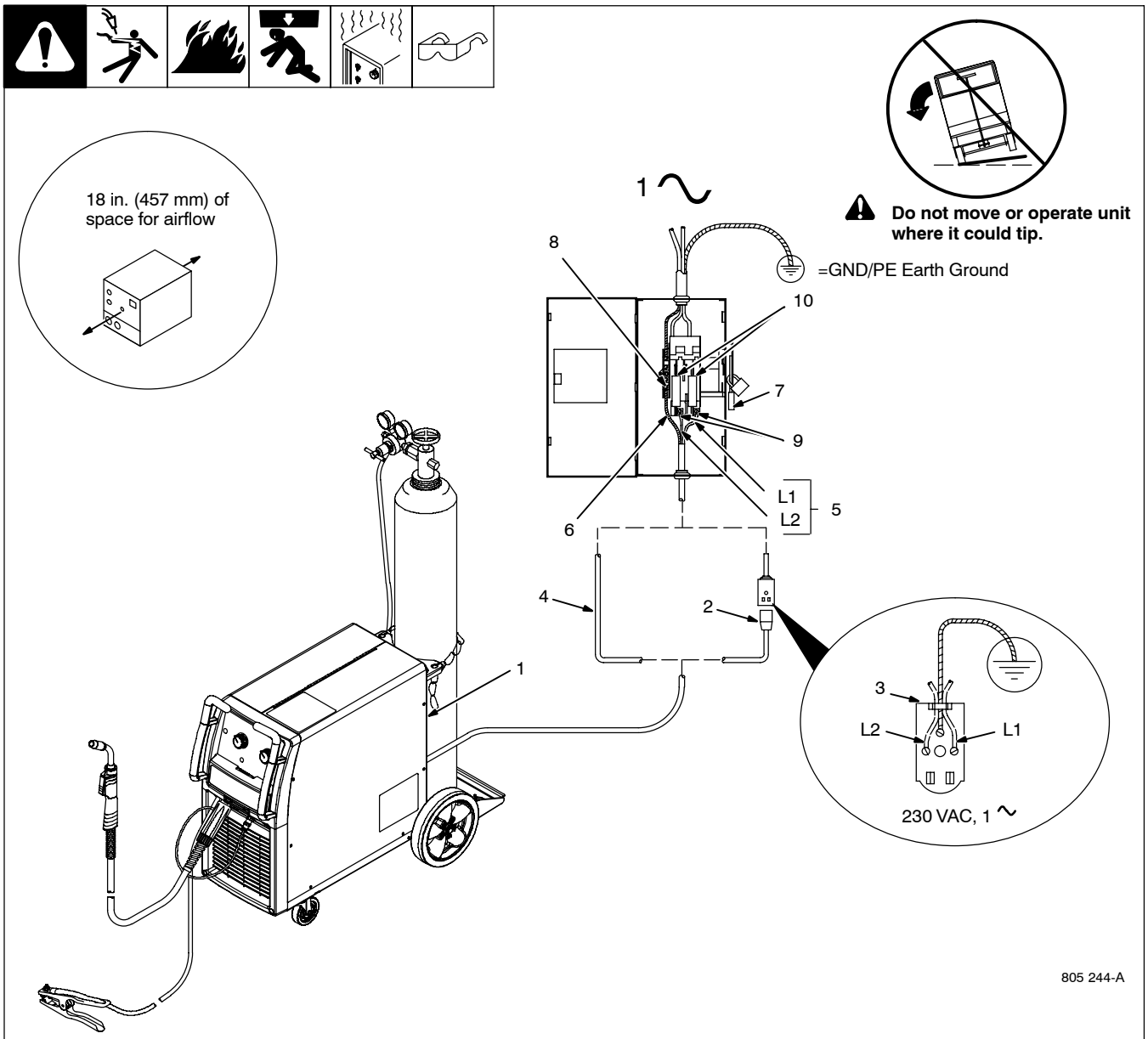

Installation must meet all National and Local Codes – have only qualified persons make this installation.

Disconnect and lockout/tagout input power before connecting input conductors from unit.

Always connect green or green/yellow conductor to supply grounding terminal first, and never to a line terminal.

Special installation may be required where gasoline or volatile liquids are present – see NEC Article 511 or CEC Section 20.

1 Rating Label

Supply correct input power.

2 Plug (NEMA Type 6-50P)

3 Receptacle [NEMA Type 6-50R (Customer Supplied)]

4 Input Power Cord.

Connect directly to line disconnect device if hard wiring is required.

5 Black And White Input Conductor (L1 And L2)

6 Green Or Green/Yellow Grounding Conductor

7 Disconnect Device (switch shown in the OFF position)

8 Disconnect Device Grounding Terminal

9 Disconnect Device Line Terminals

Connect green or green/yellow grounding conductor to disconnect device grounding terminal first.

Connect input conductors L1 and L2 to disconnect device line terminals.

10 Over-Current Protection

Select type and size of over-current protection using Section 4-12 (fused disconnect switch shown).

Connect plug to receptacle if hard wiring method is not used.

Close and secure door on disconnect device. Remove lockout/tagout device, and place switch in the On position.

4-14. Threading Welding Wire

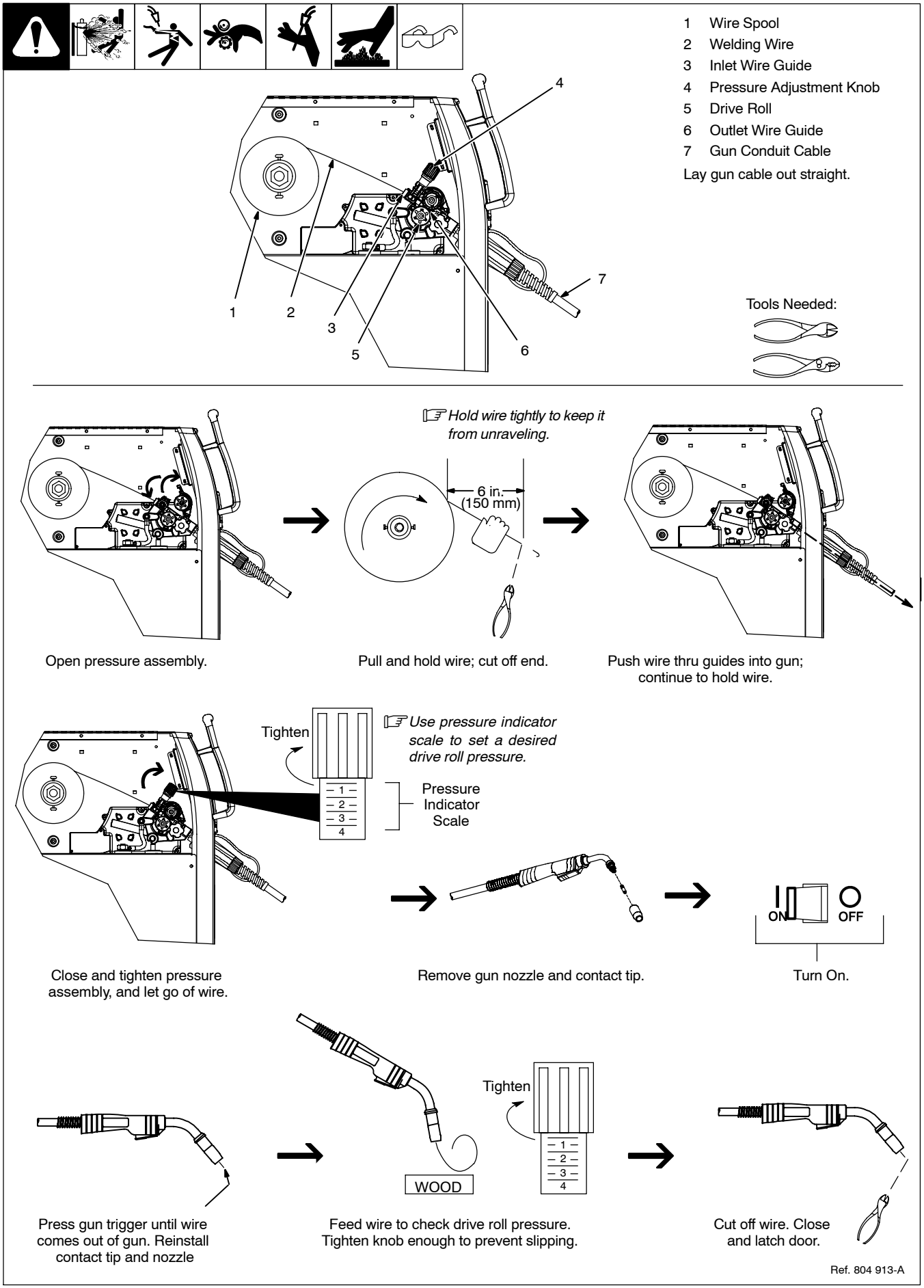

SECTION 5 – OPERATION

5-1. Controls

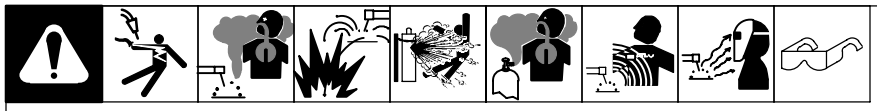

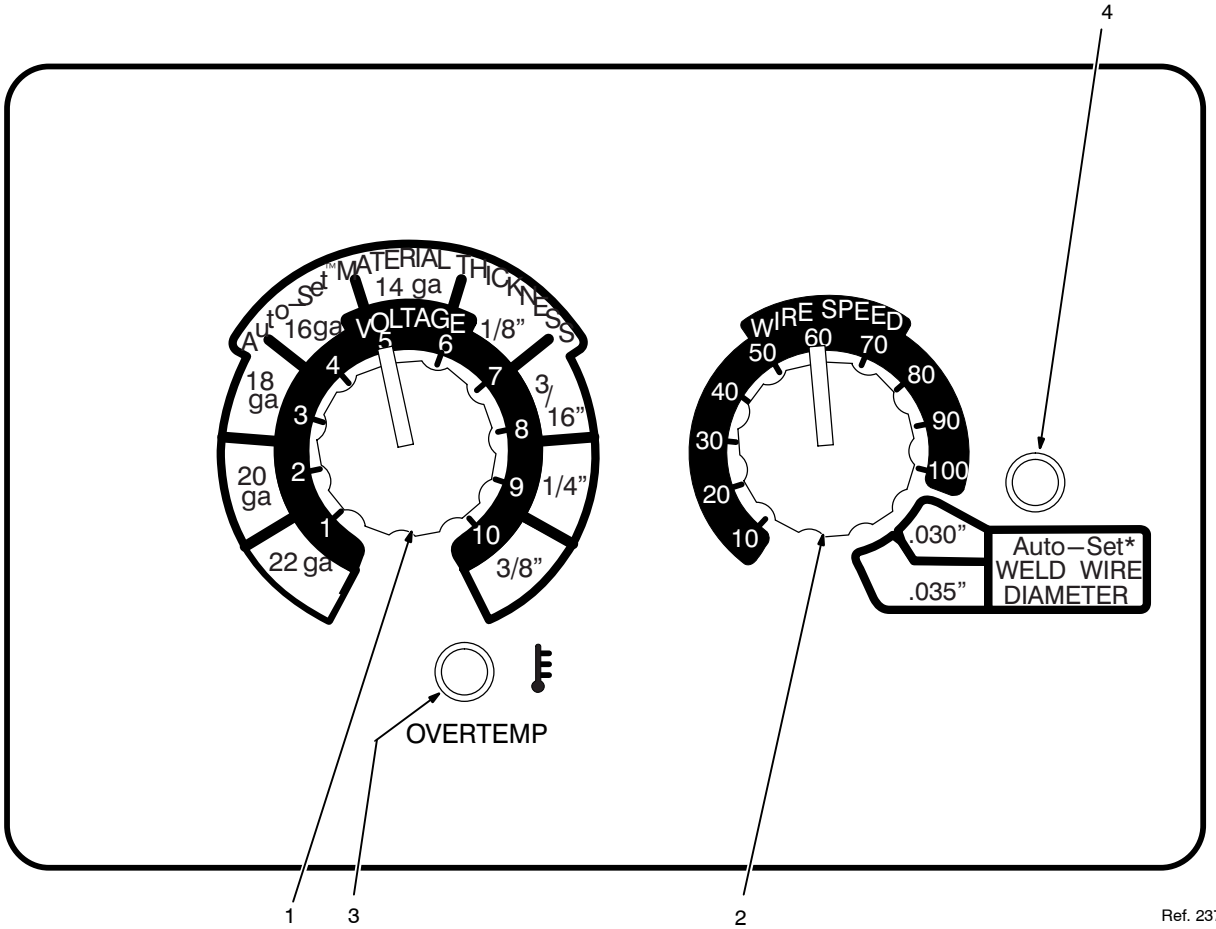

Ref. 237 436-A

1 Voltage Control

Turn control clockwise inside white scale (1-10) to increase voltage (see weld parameter chart in welding power source or Section 5-2).

2 Wire Speed Control

Turn control clockwise inside white scale (10-100) to increase wire feed speed. (see weld parameter chart in welding power source or Section 5-2).

3 Over Temp Light

If unit overheats, light turns on and output stops. Allow unit to cool before resuming operation. If gun trigger is closed or shorted when unit power is turned on, light will blink rapidly. If wire drive motor current limit is exceeded, light will blink slowly.

4 Auto–Set™ Light

To use Auto–Set™ mode, rotate Wire Speed control inside blue area for the applicable Weld Wire Diameter, Auto–Set™ light will turn on, and the unit will provide the appropriate wire feed speed for the material thickness selected using the Voltage control (see Section 5-2).

Rotate Voltage control inside blue scale (22 ga to 3/8”) for the applicable material thickness and the unit will provide the appropriate voltage within the range of the selected material thickness and the selected Weld Wire Diameter (see Section 5-2).

Notes

5-2. Weld Parameter Chart

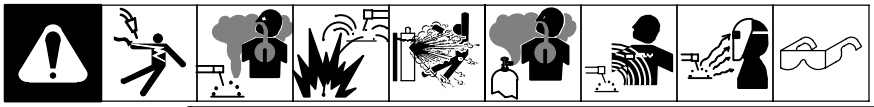

Auto–Set™ – SIMPLE SETUP FOR WELDING MILD STEEL

Example: .035” diameter wire, welding 16 ga. material.

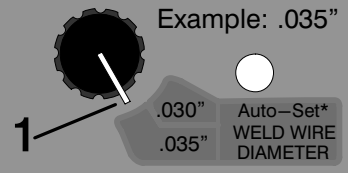

1. Activate Auto–Set™ by selecting the diameter of the welding wire with the WIRE SPEED knob. Auto–Set™ light comes on.

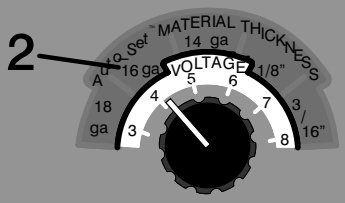

2. Select thickness of the mild steel being welded with the VOLTAGE knob. Setup complete.

USE 75% ARGON / 25% CO2 SHIELDING GAS

What Material are You Welding?	Suggested Wire Types	Suggested Shielding Gases and Flow Rate	Wire Sizes (Diameter)	[redacted] 3/8" (9.5 mm)
Steel	Solid (or hard) ER70S-6	75% Ar/25% CO_2, 25 cfh (Ar/CO_2 produces less spatter - better overall appearance)	0.023" (0.6mm) 0.030" (0.8mm) 0.035" (0.9mm)	--- **7.5/85** **7.5/75**
		100% CO_2, 25 cfh	0.023" (0.6mm) 0.030" (0.8mm) 0.035" (0.9mm)	--- --- **9/65**
Steel – for outdoor, windy applications or when weld appearance is not critical.	Flux core E71T-11	No shielding gas required	0.030" (0.8mm) 0.035" (0.9mm) 0.045" (1.1mm)	**6/75** **7/60** **6.5/50**
Stainless steel	Stainless steel ER 308, ER 308L ER 308LSi	Tri-Mix, 35 cfh (90% He/7.5% Ar/2.5% CO_2)	0.023" (0.6mm) 0.030" (0.8mm) 0.035" (0.9mm)	--- **8.5/90** **9/80**
Aluminum with Spoolmate 200 Spoolgun	Aluminum 4043 ER	100% Ar, 25 cfh	0.030" (0.8mm) 0.035" (0.9mm)	--- **10/6**
	Aluminum 5356 ER	100% Ar, 25 cfh	0.030" (0.8mm) 0.035" (0.9mm)	--- ---
Aluminum with Spoolmatic 15/30A Spoolgun	Aluminum 4043 ER	100% Ar, 25 cfh	0.030" (0.8mm) 0.035" (0.9mm)	--- **MAX/6**
	Aluminum 5356 ER	100% Ar, 25 cfh	0.030" (0.8mm) 0.035" (0.9mm)	--- ---

Manual Setup

Refer to chart below to select Voltage and Wire Speed based on thickness of metal being welded.

1. Number on right of slash is Wire Speed Knob Setting. (Example: 4 / 65)
2. Number on left of slash is Voltage Knob Setting. (Example: 4 / 65)

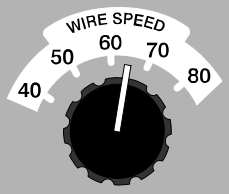

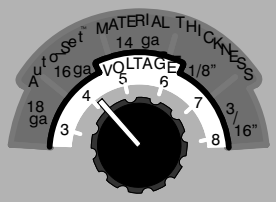

1/4" (6.4 mm)	3/16" (4.8 mm)	1/8" (3.2 mm)	14 ga. (2.0 mm)	16 ga. (1.6 mm)	18 ga. (1.2 mm)	20 ga. (0.9 mm)	22 ga. (0.8 mm)
---	6/95	4.5/70	4/60	3.5/50	3.5/45	3/40	2.5/35
6.5/75	6/70	4.8/60	4/50	3/45	2.5/40	2/38	2/31
6.5/60	5/55	4/50	3.5/45	3/40	2.5/35	2/30	2/28
---	7.5/80	6.5/70	6/60	5.5/55	4.5/45	3.7/35	4/35
8/70	7/60	5.5/50	5/45	4.5/40	4/35	3.7/31	---
8/60	7/55	5/45	4.8/40	4.5/32	4/28	---	---
4.5/65	4/60	3.5/50	3/40	2.5/32	---	---	---
6/55	5/50	4/40	3/30	---	---	---	---
5.5/45	4/40	3.5/35	---	---	---	---	---
---	8/90	7/75	6/60	5.8/50	5.5/40	5/35	---
7.5/85	7/75	6.5/65	6/55	5.2/48	4.8/40	4.5/33	---
8/70	7/60	6/50	5.5/45	5/40	4.5/35	---	---
10/6	7.5/4	5/3	3.5/3.25	3/3	---	---	---
8.5/4.5	7.5/3.5	5/2.75	2.5/2.5	1.5/2.25	---	---	---
---	7.5/5.5	6.5/5	2.5/4.5	1.75/4	---	---	---
8.5/5.5	7.5/5	6.5/4.5	2.5/4	1.75/3.5	---	---	---
9/7	7.8/6	6/5	3.5/4.8	3/4.2	---	---	---
8.5/5.5	7.5/5	6.5/4.5	3.5/4.5	3/4	---	---	---
---	7.5/MAX	6.5/8.5	3.5/7	3/6.5	---	---	---
8.5/9	7.8/8.5	6.5/7.5	3.5/6	3/5.5	---	---	---

238 552-F

SECTION 6 – MAINTENANCE &TROUBLESHOOTING

6-1. Routine Maintenance

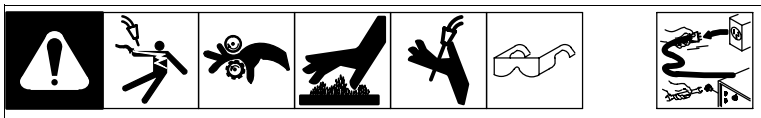

Disconnect power before maintaining.

Maintain more often during severe conditions.

	= Check ◇ = Change = Clean ☆ = Replace * To be done by Factory Authorized Service Agent				Reference
Every **3** Months	 ☆ Unreadable Labels	 Weld Terminals	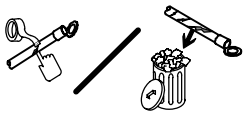 ☆ Weld Cables		
Every **6** Months	 Inside Unit	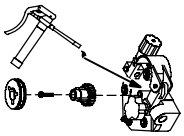 Apply Light Coat Of Oil Or Grease To Drive Motor Shaft			

6-2. Unit Overload Protection And Tip Saver/Short Circuit Protection

A. Unit Overload Protection

Thermistor RT1 in rectifier SR1 protects the unit from damage due to overheating. If Over Temp light illuminates, output and wire feed will shut down. Wait until Over Temp light turns off before resuming welding.

B. Tip Saver/Short Circuit Protection

The tip saver/short circuit protection extends contact tip life and protects internal components from damage. If contact tip is shorted to workpiece, the unit shuts down the welding output, but the fan continues to run. To resume operation, release gun trigger to reset unit. If the contact tip has stuck to the workpiece, release gun trigger, turn off unit, and remove contact tip from workpiece. Check contact tip and replace if damaged. Turn on unit to continue operation.

6-3. Changing Drive Roll and Wire Inlet Guide

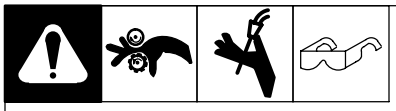

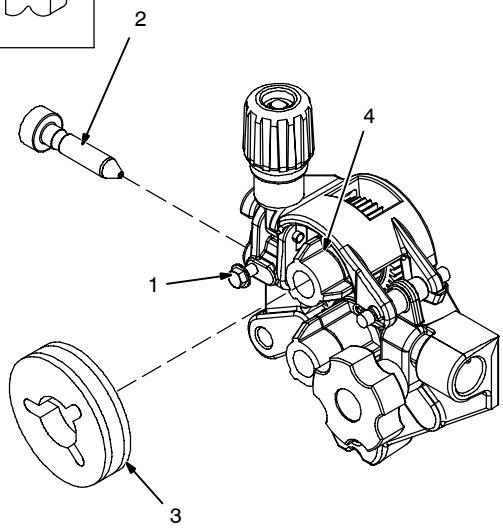

1 Securing Screw

2 Inlet Wire Guide

Loosen screw. Slide tip as close to drive rolls as possible without touching. Tighten screw.

3 Drive Roll

The drive roll consists of two different sized grooves. The stamped markings on the end surface of the drive roll refers to the groove on the opposite side of the drive roll. The groove closest to the motor shaft is the proper groove to thread (see Section 4-14).

4 Drive Roll Securing Nut

Turn nut one click to secure drive roll.

Tools Needed:

7/16 in.

Ref. 804 914-A

6-4. Aligning Drive Rolls and Wire Guide

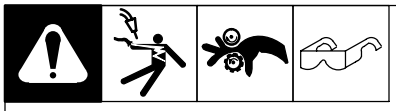

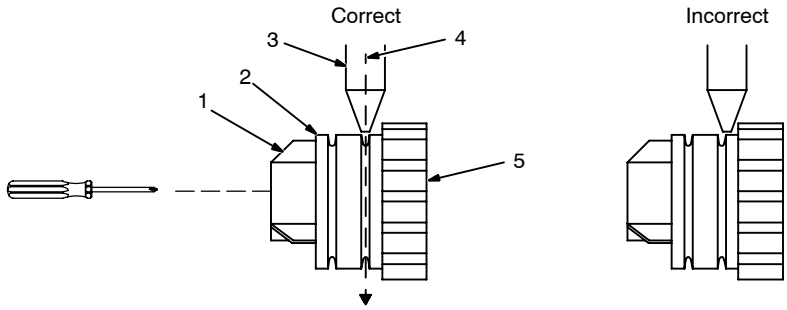

Turn Off power.

View is from top of drive rolls looking down with pressure assembly open.

1 Drive Roll Securing Nut
2 Drive Roll
3 Wire Guide
4 Welding Wire
5 Drive Gear

Insert screwdriver, and turn screw in or out until drive roll groove lines up with wire guide.

Close pressure roll assembly.

Tools Needed:

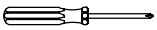

Ref. 800 412-A

6-5. Troubleshooting

Welding Trouble	Remedy
No weld output; wire does not feed.	Secure power cord plug in receptacle (see Section 4-13).
	Check and replace power switch if necessary.
	Replace building line fuse or reset circuit breaker if open (see Section 4-13).
	Secure gun plug in receptacle or repair leads, or replace trigger switch (see welding gun Owner's Manual).
No weld output; wire feeds.	Connect work clamp to get good metal to metal contact.
	Replace contact tip (see welding gun Owner's Manual).
Low weld output.	Connect unit to proper input voltage or check for low line voltage (see Section 4-13).
Low, high, or erratic wire speed.	Readjust front panel settings (see Section 5-1).
	Change to correct size drive roll (see Section 6-3).
	Readjust drive roll pressure (see Section 4-14).
	Replace inlet guide, contact tip, and/or liner if necessary (see welding gun Owner's Manual).
Over Temp light on.	Unit has overheated and output stops. Let unit cool before continuing welding operation.
Over Temp light blinks rapidly.	Gun trigger is closed or shorted when unit power is turned on.
Over Temp light blinks slowly.	Indicates a malfunction in the wire drive system or drive motor overcurrent. Check for proper spool brake adjustment or obstructions in the wire feed system. Check wire guides, gun liner and contact tip.

Wire Drive/Gun Trouble	Remedy
Wire feeding stops during welding.	Straighten gun cable and/or replace damaged parts (see welding gun Owner's Manual).
	Adjust drive roll pressure (see Section 4-14).
	Readjust hub tension (see Section 4-10).
	Replace contact tip if blocked (see welding gun Owner's Manual).
	Clean or replace wire inlet guide or liner if dirty or plugged (see welding gun Owner's Manual).
	Replace drive roll if worn or slipping (see Section 6-3).
	Secure gun plug in receptacle or repair leads, or replace trigger switch (see welding gun Owner's Manual).
	Check and clear any restrictions at drive assembly and liner (see welding gun Owner's Manual).
	Have nearest Factory Authorized Service Agent check drive motor.

Notes

SECTION 7 – ELECTRICAL DIAGRAM

⚠ WARNING	
	• Do not touch live electrical parts. • Disconnect input power or stop engine before servicing. • Do not operate with covers removed. • Have only qualified persons install, use, or service this unit.
ELECTRIC SHOCK HAZARD	

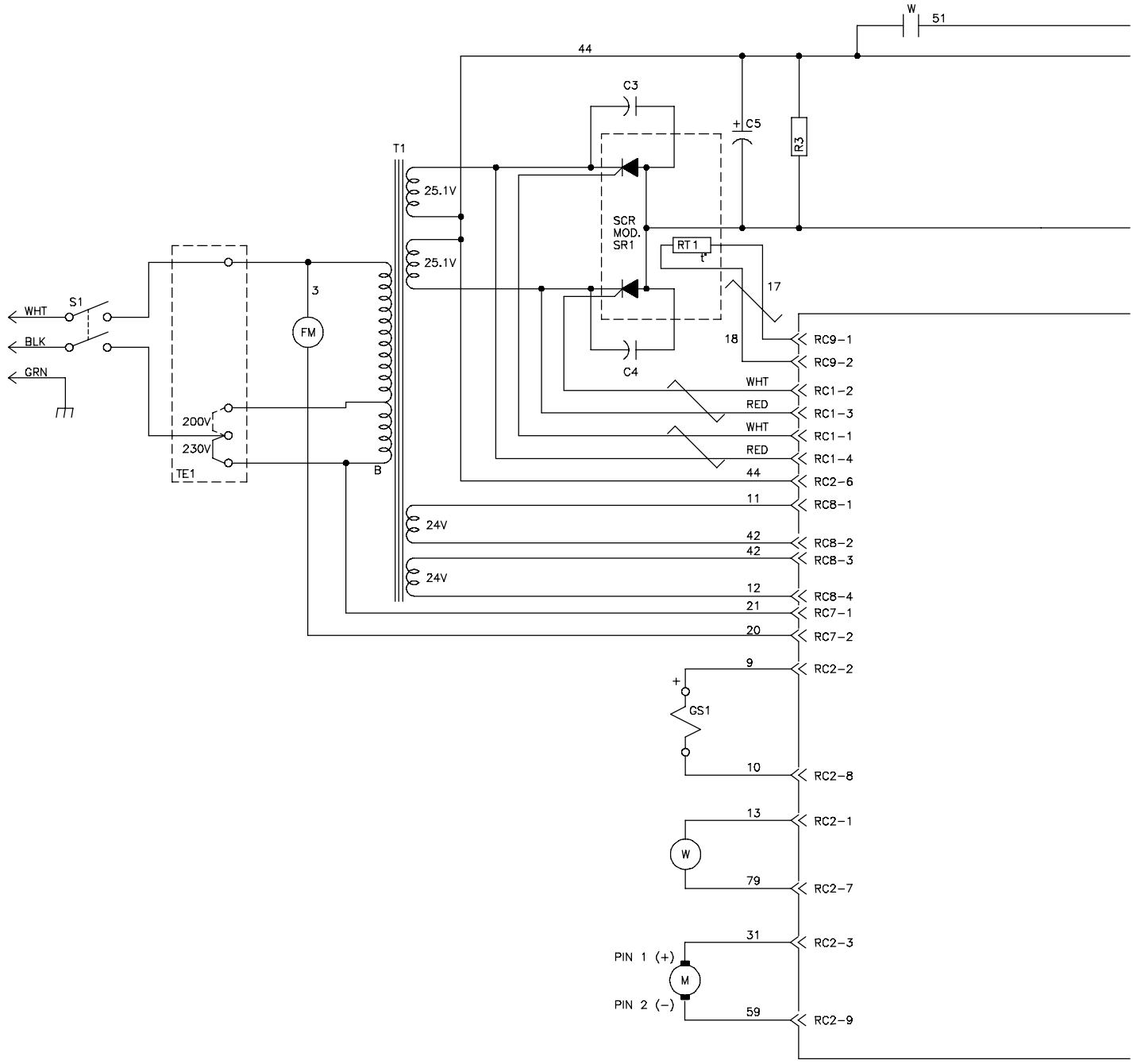

Figure 7-1. Welding Power Source Circuit Diagram

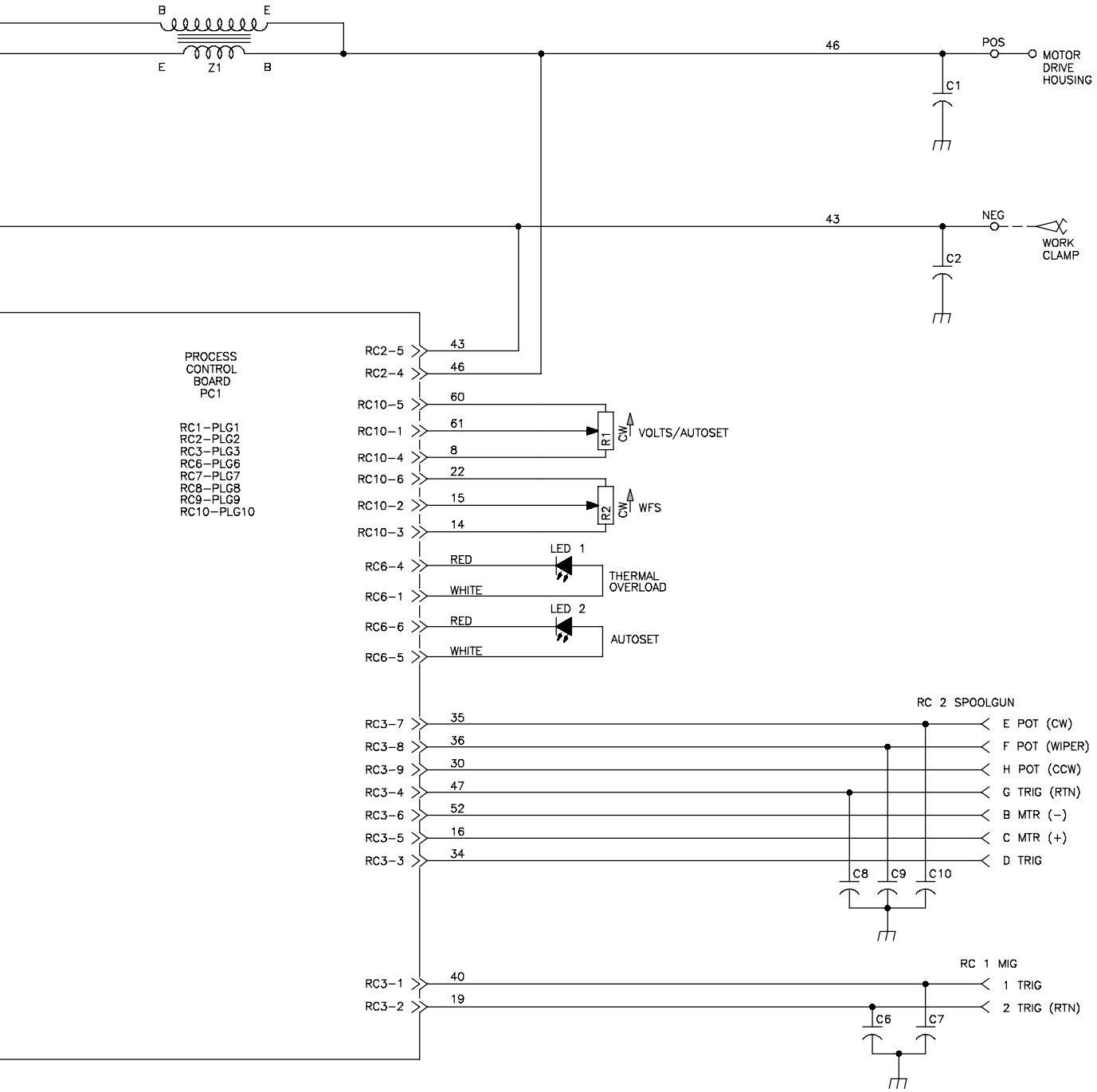
B
E
E
Z1
B
46
POS
MOTOR
DRIVE
HOUSING
C1
43
NEG
WORK
CLAMP
C2
PROCESS
CONTROL
BOARD
PC1
RC1–PLG1
RC2–PLG2
RC3–PLG3
RC6–PLG6
RC7–PLG7
RC8–PLG8
RC9–PLG9
RC10–PLG10
RC2–5
RC2–4
RC10–5
RC10–1
RC10–4
RC10–6
RC10–2
RC10–3
43
46
60
61
8
22
15
14
R1
CW
VOLTS/AUTOSET
R2
CW
WFS
RC6–4
RC6–1
RC6–6
RC6–5
RED
WHITE
RED
WHITE
LED 1
THERMAL
OVERLOAD
LED 2
AUTOSET
RC 2 SPOOLGUN
RC3–7
RC3–8
RC3–9
RC3–4
RC3–6
RC3–5
RC3–3
35
36
30
47
52
16
34
E POT (CW)
F POT (WIPER)
H POT (CCW)
G TRIG (RTN)
B MTR (–)
C MTR (+)
D TRIG
C8
C9
C10
RC 1 MIG
RC3–1
RC3–2
40
19
1 TRIG
2 TRIG (RTN)
C6
C7

238 117-D

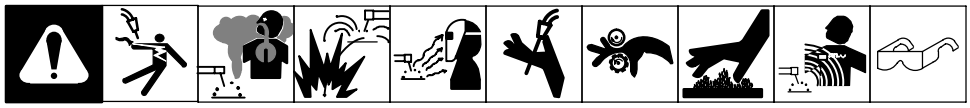

mig1 2009–12

8-1. Typical MIG Process Connections

Weld current can damage electronic parts in vehicles. Disconnect both battery cables before welding on a vehicle. Place work clamp as close to the weld as possible.

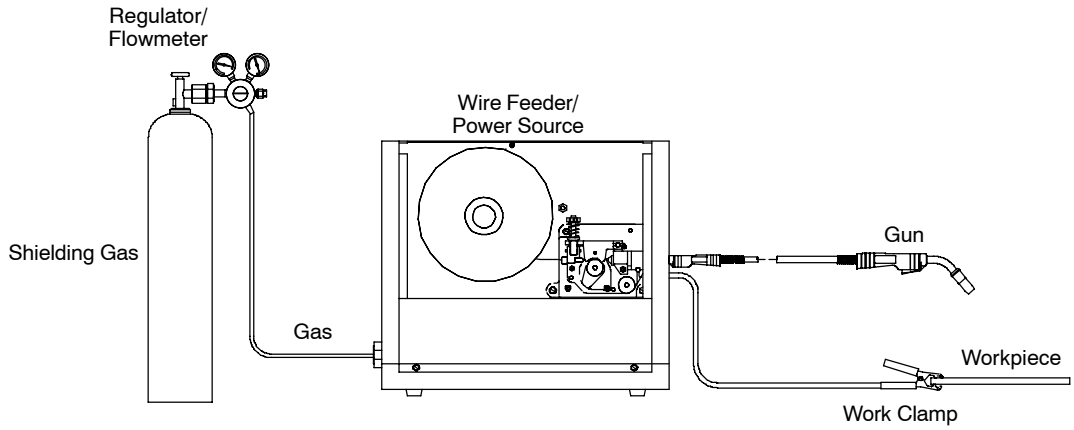

Ref. 801 909-A

8-2. Typical MIG Process Control Settings

☞ *These settings are guidelines only. Material and wire type, joint design, fitup, position, shielding gas, etc. affect settings. Test welds to be sure they comply to specifications.*

Material thickness determines weld parameters.

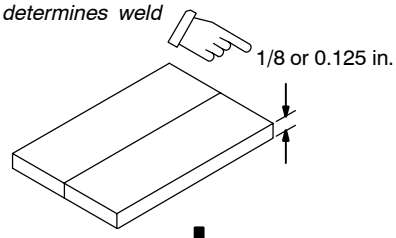

Convert Material Thickness to Amperage (A)

(0.001 in. = 1 ampere)
0.125 in. = 125 A

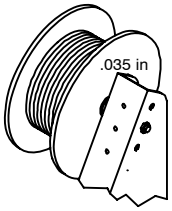

Wire Size	Amperage Range
0.023 in.	30 – 90 A
0.030 in.	40 – 145 A
0.035 in.	50 – 180 A

Select Wire Size

Wire Size	Recommendation	Wire Speed (Approx.)
0.023 in.	3.5 in. per ampere	3.5 x 125 A = 437 ipm
0.030 in.	2 in. per ampere	2 x 125 A = 250 ipm
0.035 in.	1.6 in. per ampere	1.6 x 125 A = 200 ipm

Select Wire Speed (Amperage)

125 A based on 1/8 in. material thickness

ipm = inches per minute

Low voltage: wire stubs into work
High voltage: arc is unstable (spatter)
Set voltage midway between high/low voltage

Select Voltage

Voltage controls height and width of weld bead.

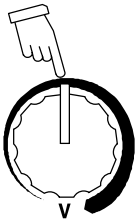

Wire speed (amperage) controls weld penetration (wire speed = burn-off rate)

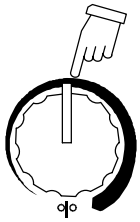

8-3. Holding And Positioning Welding Gun

☞ *Welding wire is energized when gun trigger is pressed. Before lowering helmet and pressing trigger, be sure wire is no more than 1/2 in. (13 mm) past end of nozzle, and tip of wire is positioned correctly on seam.*

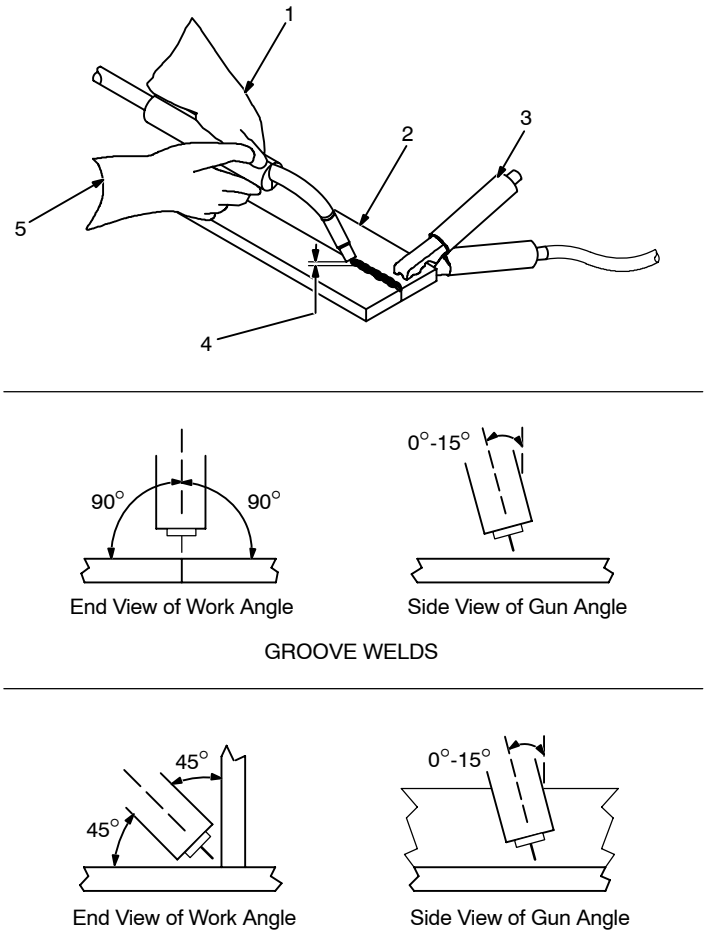

1 Hold Gun and Control Gun Trigger
2 Workpiece
3 Work Clamp
4 Electrode Extension (Stickout) 1/4 to 1/2 in. (6 To 13 mm)
5 Cradle Gun and Rest Hand on Workpiece

8-4. Conditions That Affect Weld Bead Shape

☞ *Weld bead shape depends on gun angle, direction of travel, electrode extension (stickout), travel speed, thickness of base metal, wire feed speed (weld current), and voltage.*

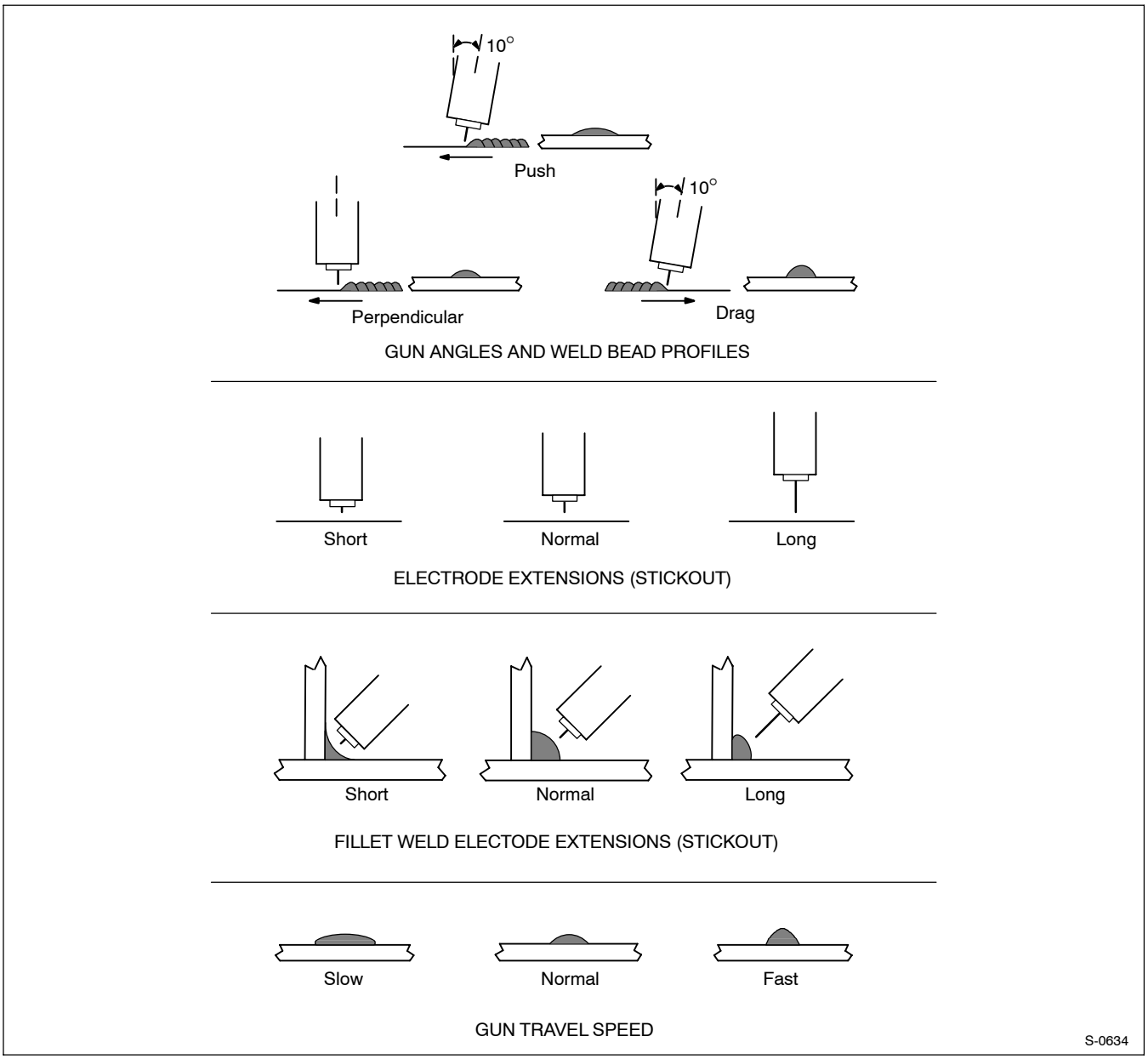

8-5. Gun Movement During Welding

☞ *Normally, a single stringer bead is satisfactory for most narrow groove weld joints; however, for wide groove weld joints or bridging across gaps, a weave bead or multiple stringer beads works better.*

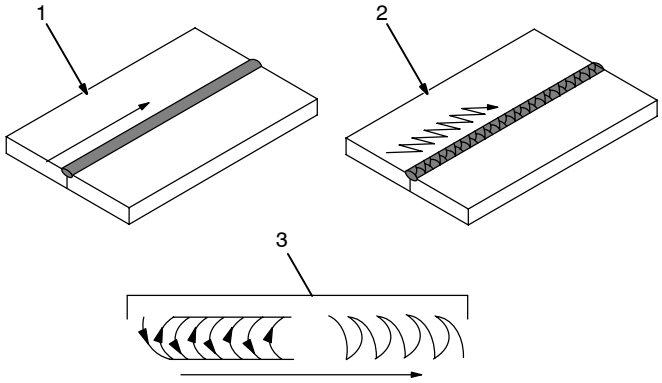

1 Stringer Bead – Steady Movement Along Seam

2 Weave Bead – Side To Side Movement Along Seam

3 Weave Patterns

Use weave patterns to cover a wide area in one pass of the electrode.

S-0054-A

8-6. Poor Weld Bead Characteristics

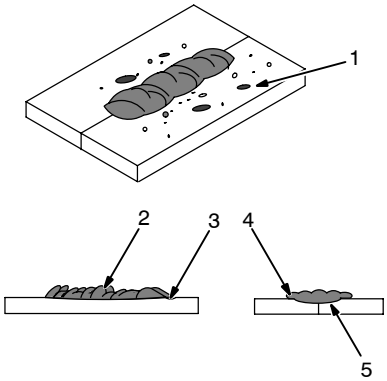

1 Large Spatter Deposits

2 Rough, Uneven Bead

3 Slight Crater During Welding

4 Bad Overlap

5 Poor Penetration

S-0053-A

8-7. Good Weld Bead Characteristics

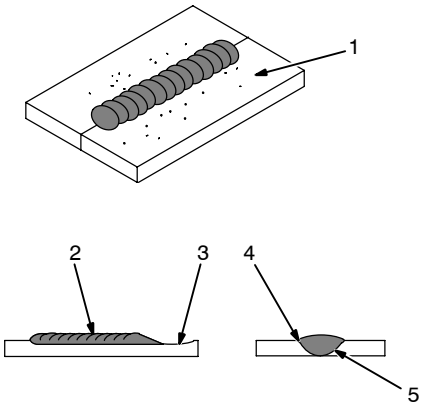

1 Fine Spatter

2 Uniform Bead

3 Moderate Crater During Welding

Weld a new bead or layer for each 1/8 in. (3.2 mm) thickness in metals being welded.

4 No Overlap

5 Good Penetration into Base Metal

S-0052-B

8-8. Troubleshooting – Excessive Spatter

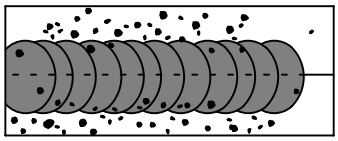

Excessive Spatter – scattering of molten metal particles that cool to solid form near weld bead.

S-0636

Possible Causes	Corrective Actions
Wire feed speed too high.	Select lower wire feed speed.
Voltage too high.	Select lower voltage range.
Electrode extension (stickout) too long.	Use shorter electrode extension (stickout).
Workpiece dirty.	Remove all grease, oil, moisture, rust, paint, undercoating, and dirt from work surface before welding.
Insufficient shielding gas at welding arc.	Increase flow of shielding gas at regulator/flowmeter and/or prevent drafts near welding arc.
Dirty welding wire.	Use clean, dry welding wire.
	Eliminate pickup of oil or lubricant on welding wire from feeder or liner.
Incorrect polarity.	Check polarity required by welding wire, and change to correct polarity at welding power source.

8-9. Troubleshooting – Porosity

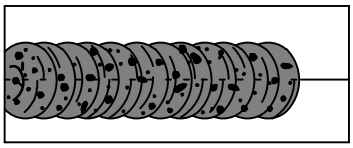

Porosity – small cavities or holes resulting from gas pockets in weld metal.

S-0635

Possible Causes	Corrective Actions
Insufficient shielding gas at welding arc.	Increase flow of shielding gas at regulator/flowmeter and/or prevent drafts near welding arc.
	Remove spatter from gun nozzle.
	Check gas hoses for leaks.
	Place nozzle 1/4 to 1/2 in. (6-13 mm) from workpiece.
	Hold gun near bead at end of weld until molten metal solidifies.
Wrong gas.	Use welding grade shielding gas; change to different gas.
Dirty welding wire.	Use clean, dry welding wire.
	Eliminate pick up of oil or lubricant on welding wire from feeder or liner.
Workpiece dirty.	Remove all grease, oil, moisture, rust, paint, coatings, and dirt from work surface before welding.
	Use a more highly deoxidizing welding wire (contact supplier).
Welding wire extends too far out of nozzle.	Be sure welding wire extends not more than 1/2 in. (13 mm) beyond nozzle.

8-10. Troubleshooting – Excessive Penetration

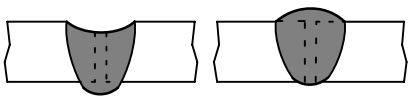

Excessive Penetration Good Penetration

Excessive Penetration – weld metal melting through base metal and hanging underneath weld.

S-0639

Possible Causes	Corrective Actions
Excessive heat input.	Select lower voltage range and reduce wire feed speed.
	Increase travel speed.

8-11. Troubleshooting – Lack Of Penetration

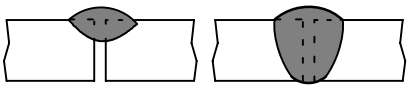

Lack Of Penetration – shallow fusion between weld metal and base metal.

S-0638

Possible Causes	Corrective Actions
Improper joint preparation.	Material too thick. Joint preparation and design must provide access to bottom of groove while maintaining proper welding wire extension and arc characteristics.
Improper weld technique.	Maintain normal gun angle of 0 to 15 degrees to achieve maximum penetration.
	Keep arc on leading edge of weld puddle.
	Be sure welding wire extends not more than 1/2 in. (13 mm) beyond nozzle.
Insufficient heat input.	Select higher wire feed speed and/or select higher voltage range.
	Reduce travel speed.
Incorrect polarity.	Check polarity required by welding wire, and change to correct polarity at welding power source.

8-12. Troubleshooting – Incomplete Fusion

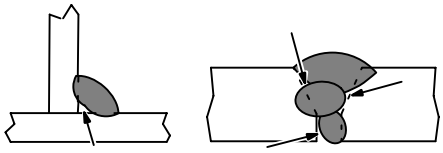

Incomplete Fusion – failure of weld metal to fuse completely with base metal or a preceeding weld bead.

S-0637

Possible Causes	Corrective Actions
Workpiece dirty.	Remove all grease, oil, moisture, rust, paint, undercoating, and dirt from work surface before welding.
Insufficient heat input.	Select higher voltage range and/or adjust wire feed speed.
Improper welding technique.	Place stringer bead in proper location(s) at joint during welding.
	Adjust work angle or widen groove to access bottom during welding.
	Momentarily hold arc on groove side walls when using weaving technique.
	Keep arc on leading edge of weld puddle.
	Use correct gun angle of 0 to 15 degrees.

8-13. Troubleshooting – Burn-Through

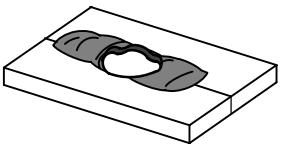

Burn-Through – weld metal melting completely through base metal resulting in holes where no metal remains.

S-0640

Possible Causes	Corrective Actions
Excessive heat input.	Select lower voltage range and reduce wire feed speed.
	Increase and/or maintain steady travel speed.

8-14. Troubleshooting – Waviness Of Bead

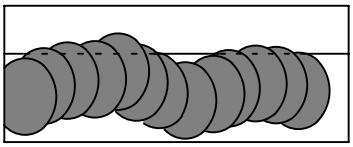

Waviness Of Bead – weld metal that is not parallel and does not cover joint formed by base metal.

S-0641

Possible Causes	Corrective Actions
Welding wire extends too far out of nozzle.	Be sure welding wire extends not more than 1/2 in. (13 mm) beyond nozzle.
Unsteady hand.	Support hand on solid surface or use two hands.

8-15. Troubleshooting – Distortion

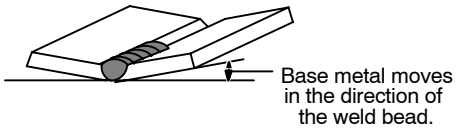

Distortion – contraction of weld metal during welding that forces base metal to move.

S-0642

Possible Causes	Corrective Actions
Excessive heat input.	Use restraint (clamp) to hold base metal in position.
	Make tack welds along joint before starting welding operation.
	Select lower voltage range and/or reduce wire feed speed.
	Increase travel speed.
	Weld in small segments and allow cooling between welds.

8-16. Common MIG Shielding Gases

This is a general chart for common gases and where they are used. Many different combinations (mixtures) of shielding gases have been developed over the years. The most commonly used shielding gases are listed in the following table.

Gas	Application			
	Spray Arc Steel	Short Circuiting Steel	Short Circuiting Stainless Steel	Aluminum
Argon				X
Argon + 25% CO_2		X		
80% or greater Argon + balance CO_2 or Oxygen	X	X[1]		
100% CO_2		X		
Tri-Mix[2]			X	

1 Limited short circuiting use

2 90% HE + 7-1/2% AR + 2-1/2% CO_2

8-17. Troubleshooting Guide For Semiautomatic Welding Equipment

Problem	Probable Cause	Remedy
Wire feed motor operates, but wire does not feed.	Too little pressure on wire feed rolls.	Increase pressure setting on wire feed rolls.
	Incorrect wire feed rolls.	Check size stamped on wire feed rolls, replace to match wire size and type if necessary.
	Wire spool brake pressure too high.	Decrease brake pressure on wire spool.
	Restriction in the gun and/or assembly.	Check and replace cable, gun, and contact tip if damaged. Check size of contact tip and cable liner, replace if necessary.
Wire curling up in front of the wire feed rolls (bird nesting).	Too much pressure on wire feed rolls.	Decrease pressure setting on wire feed rolls.
	Incorrect cable liner or gun contact tip size.	Check size of contact tip and check cable liner length and diameter, replace if necessary.
	Gun end not inserted into drive housing properly.	Loosen gun securing bolt in drive housing and push gun end into housing just enough so it does not touch wire feed rolls.
	Dirty or damaged (kinked) liner.	Replace liner.
Wire feeds, but no gas flows.	Gas cylinder empty.	Replace empty gas cylinder.
	Gas nozzle plugged.	Clean or replace gas nozzle.
	Gas cylinder valve not open or flowmeter not adjusted.	Open gas valve at cylinder and adjust flow rate.
	Restriction in gas line.	Check gas hose between flowmeter and wire feeder, and gas hose in gun and cable assembly.
	Loose or broken wires to gas solenoid.	Have Factory Authorized Service Agent repair wiring.
	Gas solenoid valve not operating.	Have Factory Authorized Service Agent replace gas solenoid valve.
	Incorrect primary voltage connected to welding power source.	Check primary voltage and relink welding power source for correct voltage.

Problem	Probable Cause	Remedy
Welding arc not stable.	Wire slipping in drive rolls.	Adjust pressure setting on wire feed rolls. Replace worn drive rolls if necessary.
	Wrong size gun liner or contact tip.	Match liner and contact tip to wire size and type.
	Incorrect voltage setting for selected wire feed speed on welding power source.	Readjust welding parameters.
	Loose connections at the gun weld cable or work cable.	Check and tighten all connections.
	Gun in poor shape or loose connection inside gun.	Repair or replace gun as necessary.

9-1. Drive Roll And Wire Guide Kits

☞ *Base selection of drive rolls upon the following recommended usages:*

1 V-Grooved rolls for hard wire (solid steel and metal cored).
2 U-Grooved rolls for soft and soft shelled cored wires (aluminum).
3 U-Cogged rolls for extremely soft shelled wires (usually hard surfacing types).
4 V-Knurled rolls for hard shelled cored wires (flux cored).
5 Drive roll types may be mixed to suit particular requirements (example: V-Knurled roll in combination with U-Grooved).

Wire Diameter			Kit No.	Drive Roll		Inlet Wire Guide
Fraction	Decimal	Metric		Part No.	Type	
.023/.025 in.	.023/.025 in	0.6 mm	087 131	087 130	V-Grooved	056 192
.030/.035 in.	.030/.035 in.	0.8/0.9 mm	204 579	203 526	V-Grooved	056 192
.030 in.	.030 in.	0.8 mm	079 594	053 695	V-Grooved	056 192
.035 in.	.035 in.	0.9 mm	079 595	053 700	V-Grooved	056 192
.045 in.	.045 in.	1.2 mm	079 596	053 697	V-Grooved	056 193

Ref. S-0026-B/7-91

☞ *A complete Parts List is available at www.MillerWelds.com*

TRUE BLUE® WARRANTY

Effective January 1, 2010
(Equipment with a serial number preface of MA or newer)

This limited warranty supersedes all previous Miller warranties and is exclusive with no other guarantees or warranties expressed or implied.

LIMITED WARRANTY – Subject to the terms and conditions below, Miller Electric Mfg. Co., Appleton, Wisconsin, warrants to its original retail purchaser that new Miller equipment sold after the effective date of this limited warranty is free of defects in material and workmanship at the time it is shipped by Miller. THIS WARRANTY IS EXPRESSLY IN LIEU OF ALL OTHER WARRANTIES, EXPRESS OR IMPLIED, INCLUDING THE WARRANTIES OF MERCHANTABILITY AND FITNESS.

Within the warranty periods listed below, Miller will repair or replace any warranted parts or components that fail due to such defects in material or workmanship. Miller must be notified in writing within thirty (30) days of such defect or failure, at which time Miller will provide instructions on the warranty claim procedures to be followed.

Miller shall honor warranty claims on warranted equipment listed below in the event of such a failure within the warranty time periods. All warranty time periods start on the delivery date of the equipment to the original end-user purchaser, and not to exceed one year after the equipment is shipped to a North American distributor or eighteen months after the equipment is shipped to an International distributor.

1. 5 Years Parts — 3 Years Labor
   * Original main power rectifiers only to include SCRs, diodes, and discrete rectifier modules
2. 3 Years — Parts and Labor
   * Engine Driven Welding Generators **(NOTE: Engines are warranted separately by the engine manufacturer.)**
   * Inverter Power Sources (Unless Otherwise Stated)
   * Plasma Arc Cutting Power Sources
   * Process Controllers
   * Semi-Automatic and Automatic Wire Feeders
   * Smith 30 Series Flowgauge and Flowmeter Regulators (No Labor)
   * Transformer/Rectifier Power Sources
   * Water Coolant Systems (Integrated)
3. 2 Years — Parts
   * Auto-Darkening Helmet Lenses (No Labor)
4. 1 Year — Parts and Labor Unless Specified
   * Automatic Motion Devices
   * CoolBelt and CoolBand Blower Unit (No Labor)
   * External Monitoring Equipment and Sensors
   * Field Options (NOTE: Field options are covered for the remaining warranty period of the product they are installed in, or for a minimum of one year — whichever is greater.)
   * Flowgauge and Flowmeter Regulators (No Labor)
   * RFCS Foot Controls (Except RFCS-RJ45)
   * Fume Extractors
   * HF Units
   * ICE Plasma Cutting Torches (No Labor)
   * Induction Heating Power Sources, Coolers, and Electronic Controls/Recorders
   * Load Banks
   * Motor Driven Guns (w/exception of Spoolmate Spoolguns)
   * PAPR Blower Unit (No Labor)
   * Positioners and Controllers
   * Racks
   * Running Gear/Trailers
   * Spot Welders
   * Subarc Wire Drive Assemblies
   * Water Coolant Systems (Non-Integrated)
   * Weldcraft-Branded TIG Torches (No Labor)
   * Work Stations/Weld Tables (No Labor)
5. 6 Months — Parts
   * Batteries
   * Bernard Guns (No Labor)
   * Tregaskiss Guns (No Labor)
6. 90 Days — Parts
   * Accessory (Kits)
   * Canvas Covers
   * Induction Heating Coils and Blankets, Cables, and Non-Electronic Controls
   * M-Guns
   * MIG Guns and Subarc (SAW) Guns
   * Remote Controls and RFCS-RJ45
   * Replacement Parts (No labor)
   * Roughneck Guns
   * Spoolmate Spoolguns

Miller's True Blue® Limited Warranty shall not apply to:

1. **Consumable components; such as contact tips, cutting nozzles, contactors, brushes, relays, work station table tops and welding curtains, or parts that fail due to normal wear. (Exception: brushes and relays are covered on all engine-driven products.)**
2. Items furnished by Miller, but manufactured by others, such as engines or trade accessories. These items are covered by the manufacturer's warranty, if any.
3. Equipment that has been modified by any party other than Miller, or equipment that has been improperly installed, improperly operated or misused based upon industry standards, or equipment which has not had reasonable and necessary maintenance, or equipment which has been used for operation outside of the specifications for the equipment.

MILLER PRODUCTS ARE INTENDED FOR PURCHASE AND USE BY COMMERCIAL/INDUSTRIAL USERS AND PERSONS TRAINED AND EXPERIENCED IN THE USE AND MAINTENANCE OF WELDING EQUIPMENT.

In the event of a warranty claim covered by this warranty, the exclusive remedies shall be, at Miller's option: (1) repair; or (2) replacement; or, where authorized in writing by Miller in appropriate cases, (3) the reasonable cost of repair or replacement at an authorized Miller service station; or (4) payment of or credit for the purchase price (less reasonable depreciation based upon actual use) upon return of the goods at customer's risk and expense. Miller's option of repair or replacement will be F.O.B., Factory at Appleton, Wisconsin, or F.O.B. at a Miller authorized service facility as determined by Miller. Therefore no compensation or reimbursement for transportation costs of any kind will be allowed.

TO THE EXTENT PERMITTED BY LAW, THE REMEDIES PROVIDED HEREIN ARE THE SOLE AND EXCLUSIVE REMEDIES. IN NO EVENT SHALL MILLER BE LIABLE FOR DIRECT, INDIRECT, SPECIAL, INCIDENTAL OR CONSEQUENTIAL DAMAGES (INCLUDING LOSS OF PROFIT), WHETHER BASED ON CONTRACT, TORT OR ANY OTHER LEGAL THEORY.

ANY EXPRESS WARRANTY NOT PROVIDED HEREIN AND ANY IMPLIED WARRANTY, GUARANTY OR REPRESENTATION AS TO PERFORMANCE, AND ANY REMEDY FOR BREACH OF CONTRACT TORT OR ANY OTHER LEGAL THEORY WHICH, BUT FOR THIS PROVISION, MIGHT ARISE BY IMPLICATION, OPERATION OF LAW, CUSTOM OF TRADE OR COURSE OF DEALING, INCLUDING ANY IMPLIED WARRANTY OF MERCHANTABILITY OR FITNESS FOR PARTICULAR PURPOSE, WITH RESPECT TO ANY AND ALL EQUIPMENT FURNISHED BY MILLER IS EXCLUDED AND DISCLAIMED BY MILLER.

Some states in the U.S.A. do not allow limitations of how long an implied warranty lasts, or the exclusion of incidental, indirect, special or consequential damages, so the above limitation or exclusion may not apply to you. This warranty provides specific legal rights, and other rights may be available, but may vary from state to state.

In Canada, legislation in some provinces provides for certain additional warranties or remedies other than as stated herein, and to the extent that they may not be waived, the limitations and exclusions set out above may not apply. This Limited Warranty provides specific legal rights, and other rights may be available, but may vary from province to province.

Warranty Questions?

Call
1-800-4-A-MILLER
for your local
Miller distributor.

Your distributor also gives you ...

Service
You always get the fast, reliable response you need. Most replacement parts can be in your hands in 24 hours.

Support
Need fast answers to the tough welding questions? Contact your distributor. The expertise of the distributor and Miller is there to help you, every step of the way.

Miller®

Owner's Record

Please complete and retain with your personal records.

Model Name Serial/Style Number

Purchase Date (Date which equipment was delivered to original customer.)

Distributor

Address

City

State Zip

For Service

Contact a DISTRIBUTOR or SERVICE AGENCY near you.

Always provide Model Name and Serial/Style Number.

Contact your Distributor for:	Welding Supplies and Consumables Options and Accessories Personal Safety Equipment Service and Repair Replacement Parts Training (Schools, Videos, Books) Technical Manuals (Servicing Information and Parts) Circuit Diagrams Welding Process Handbooks To locate a Distributor or Service Agency visit www.millerwelds.com or call 1-800-4-A-Miller
Contact the Delivering Carrier to:	File a claim for loss or damage during shipment. For assistance in filing or settling claims, contact your distributor and/or equipment manufacturer's Transportation Department.

Miller Electric Mfg. Co.
An Illinois Tool Works Company
1635 West Spencer Street
Appleton, WI 54914 USA

International Headquarters–USA
USA Phone: 920-735-4505 Auto-Attended
USA & Canada FAX: 920-735-4134
International FAX: 920-735-4125

For International Locations Visit
www.MillerWelds.com

ORIGINAL INSTRUCTIONS – PRINTED IN USA

© 2010 Miller Electric Mfg. Co. 2010–01